Manual

A few words about the building .....

- I recommend a layer of 0.2 mm, just 20% fill.
- I use PLA filament.
- For tires use 5% infill and you must use flex filament

You will need:

- Servo 20kg https://www.bighobby.cz/JX-servo-PS-5521MG-analog-55g-0-16sec-20kg-d1303.htm
- Motor

  https://velkoobchod.conrad.sk/vysoce-vykonny-motor-modelcraft-rb350018-2a723r-12-v-18-1.k233131
- Motor for reel 12V 30RPN https://techfun.sk/produkt/dc-motorcek-s-prevodom-rozne-typy/
- Motor for pistons 4x- 12V 100RPN https://techfun.sk/produkt/dc-motorcek-s-prevodom-rozne-typy/
- Batery for RC model 12V no more.
- Regulator for engine https://htmodel.sk/esc-regulator-konect-40a-waterproof/
- Regulato for reel and pistons – you need 3pcs
  https://www.conrad.sk/p/reely-auto-brushed-zatazitelnost-max-60-a-attnummotor-limit-20-2250414

Non printed parts :

contains 20 bearings 10x15x4

screws M3 x 10 mm - 50 pcs

screws M3 x 16 mm – 20pcs

screws M3 x 30 mm – 20pcs

screws M3 x 40 mm – 6pcs

screws M2 x 10 mm – 50 pcs

screws M2 x 5 mm – 30 pcs

Steel rod dia 3mm – 63mm long 4x

threaded rod dia 4mm – 1m

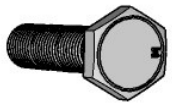
screws M6 x 40mm - 1x

set screws M3x10mm - 100x

nut M4 - 10x

nut M2 - 10x

Step 1

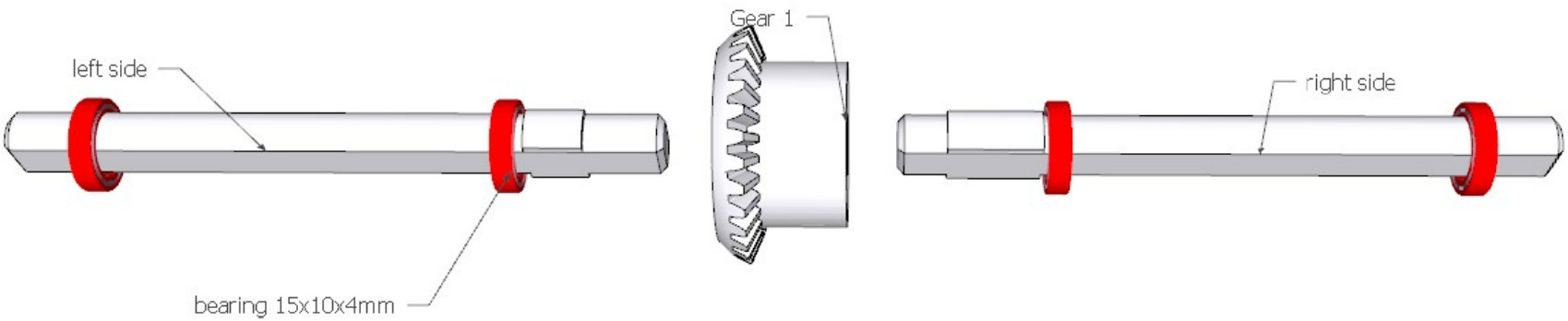

Step 2

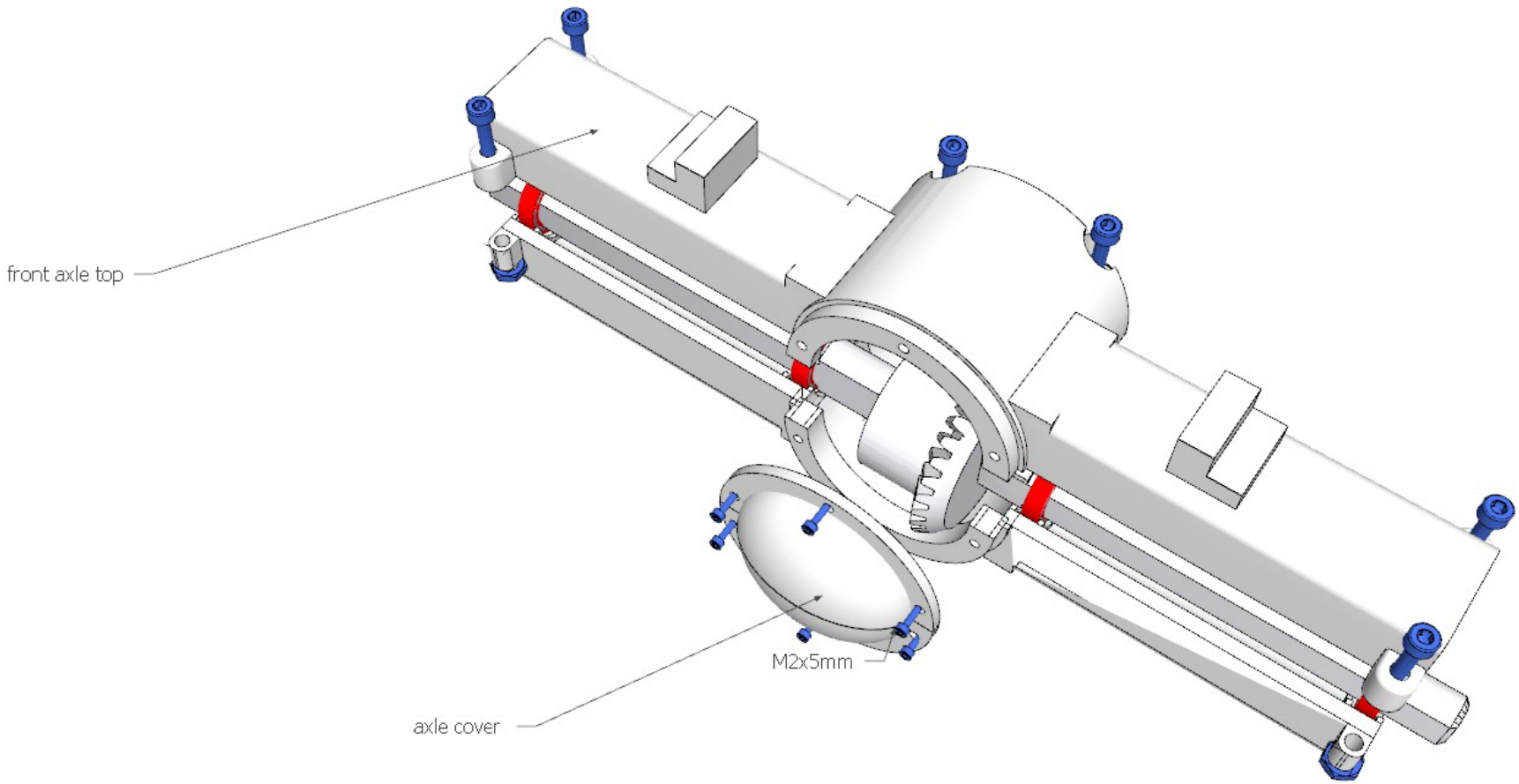

Step 3

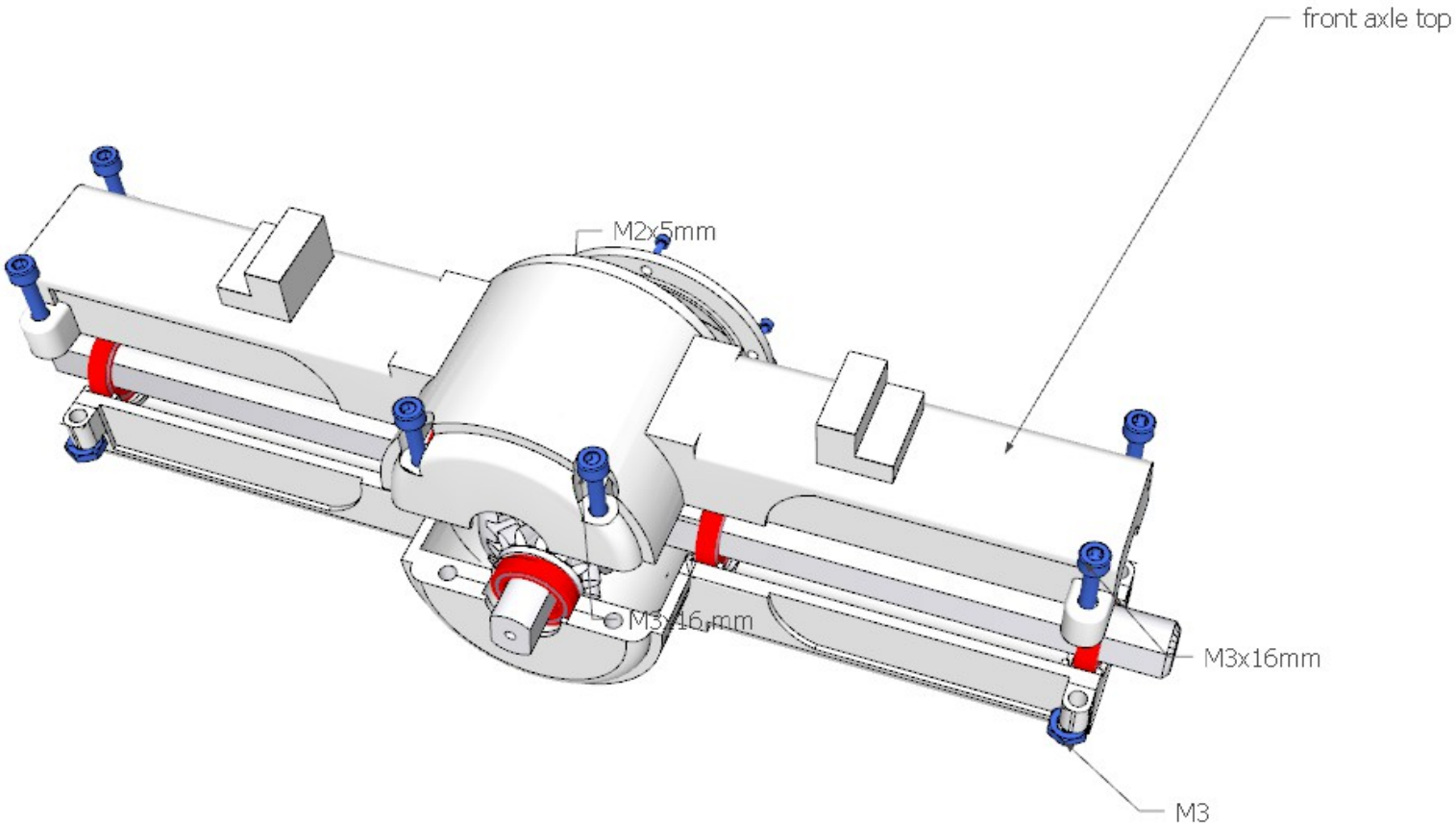

Step 4

Back axle , same procedure as front axle

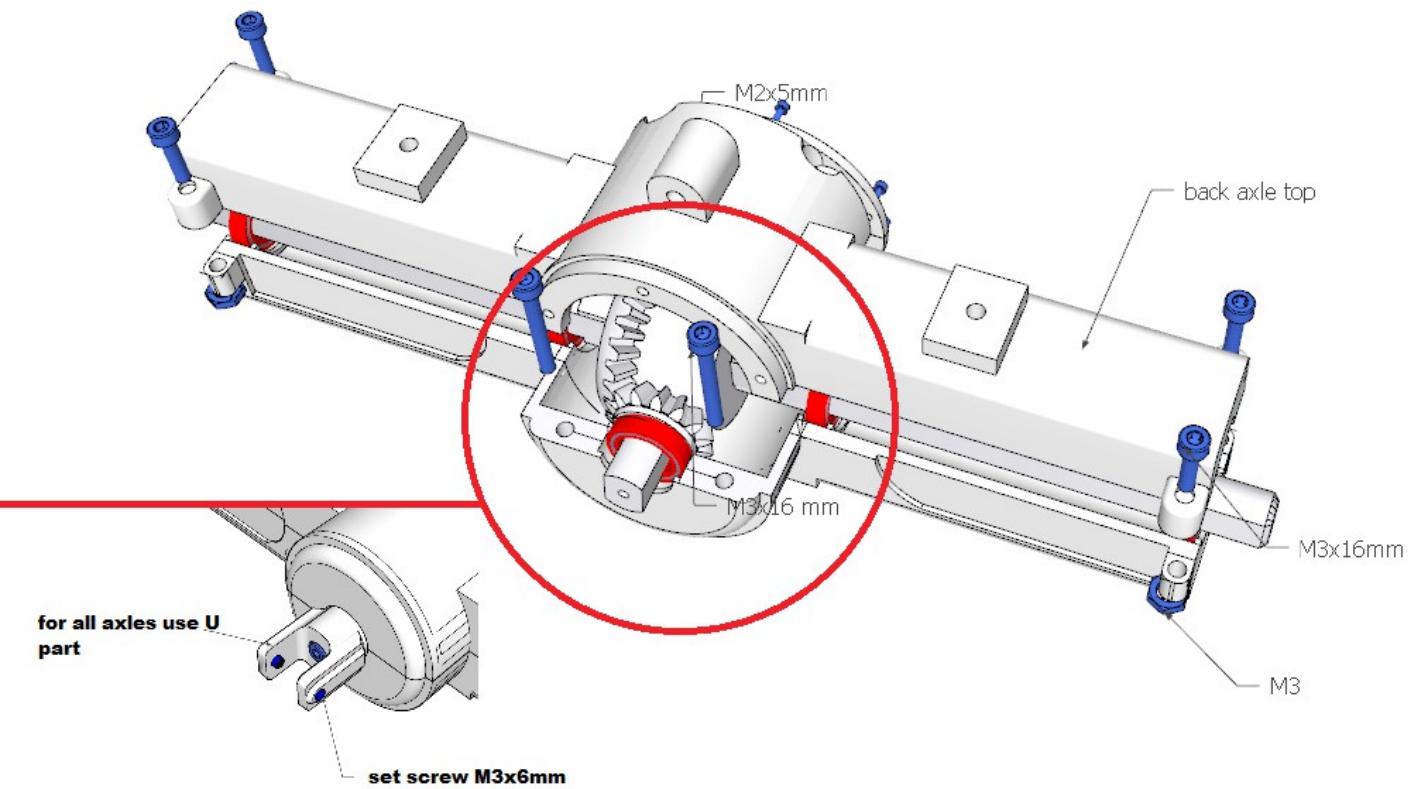

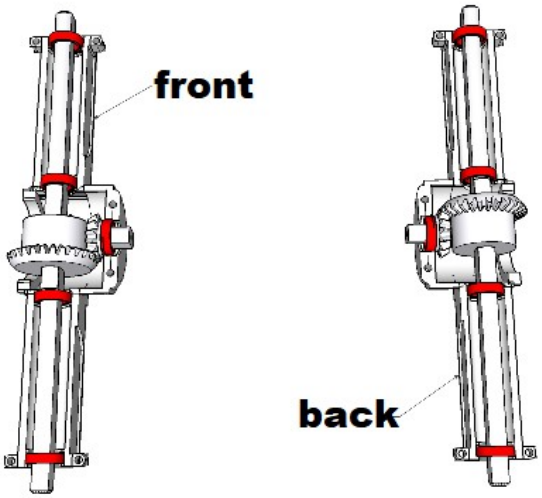

CAUTION : gear orientation

Step 5

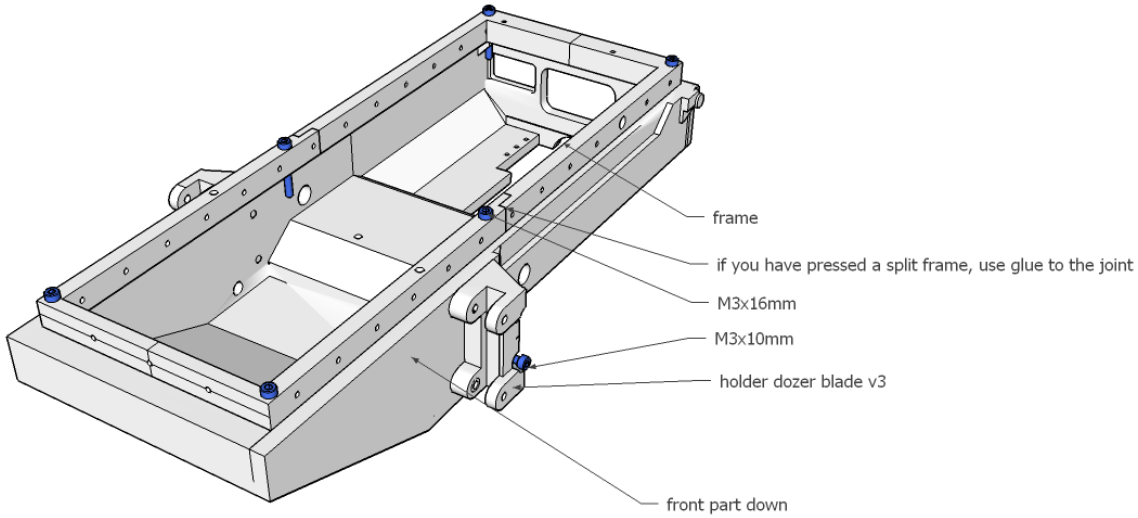
frame
if you have pressed a split frame, use glue to the joint
M3x16mm
M3x10mm
holder dozer blade v3
front part down

Step 6

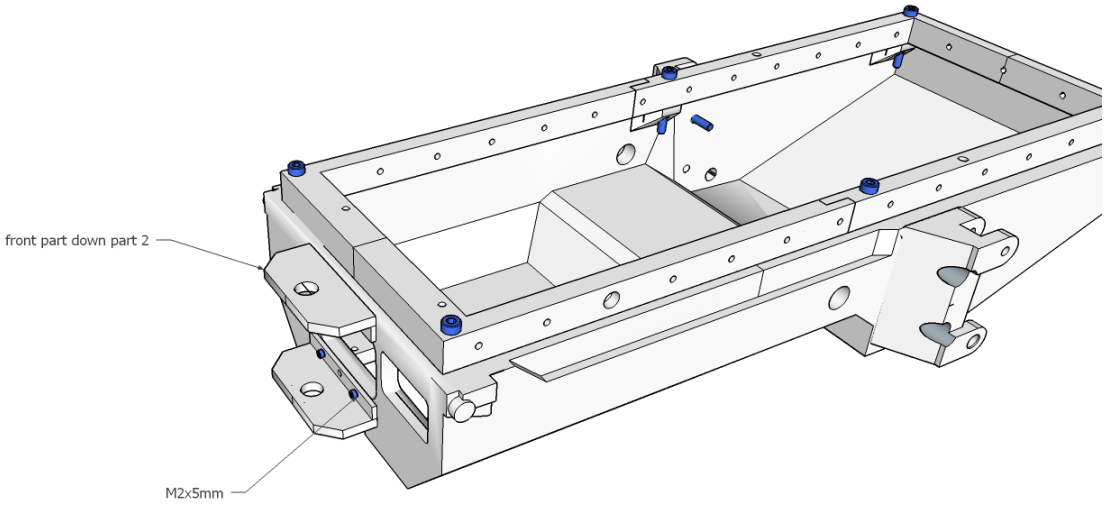

Step 7

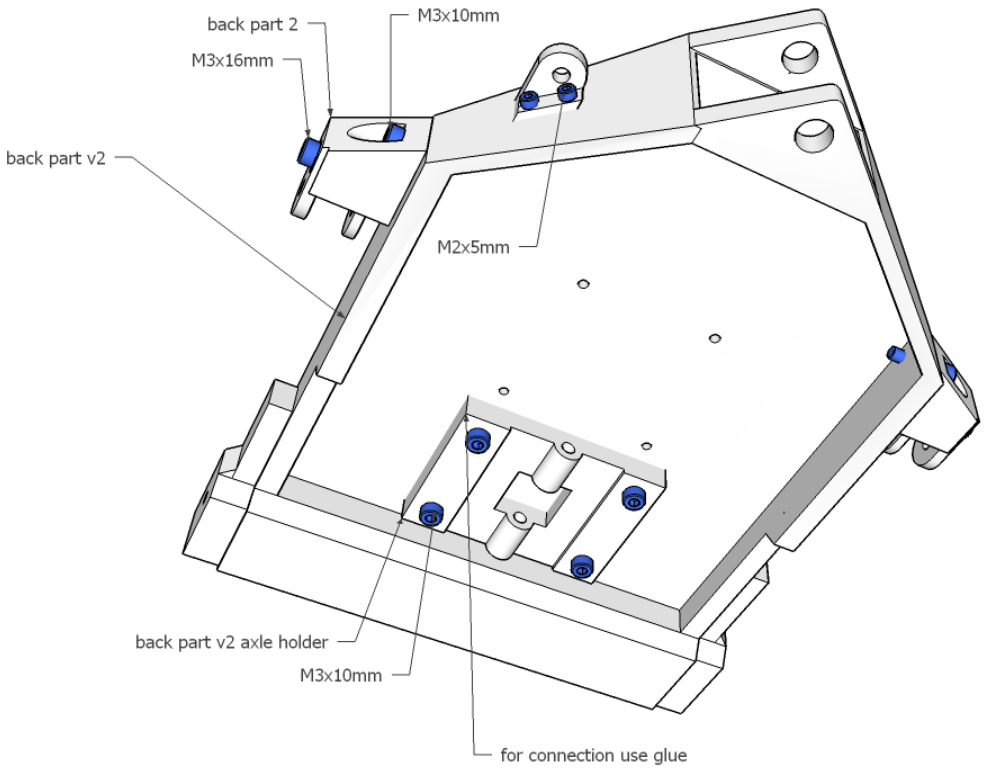
back part 2
M3x10mm
M3x16mm
back part v2
M2x5mm
back part v2 axle holder
M3x10mm
for connection use glue

Step 8

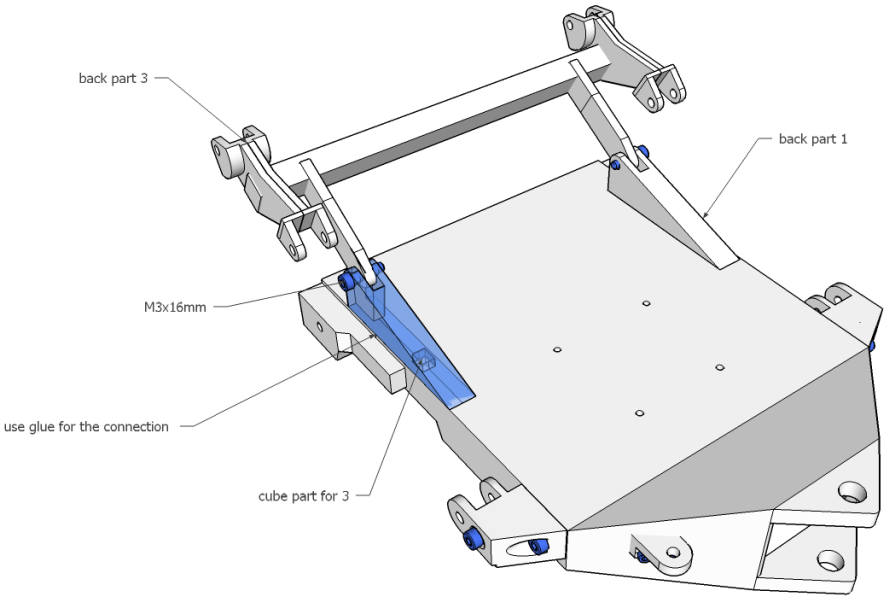
back part 3
back part 1
M3x16mm
use glue for the connection
cube part for 3

Step 9

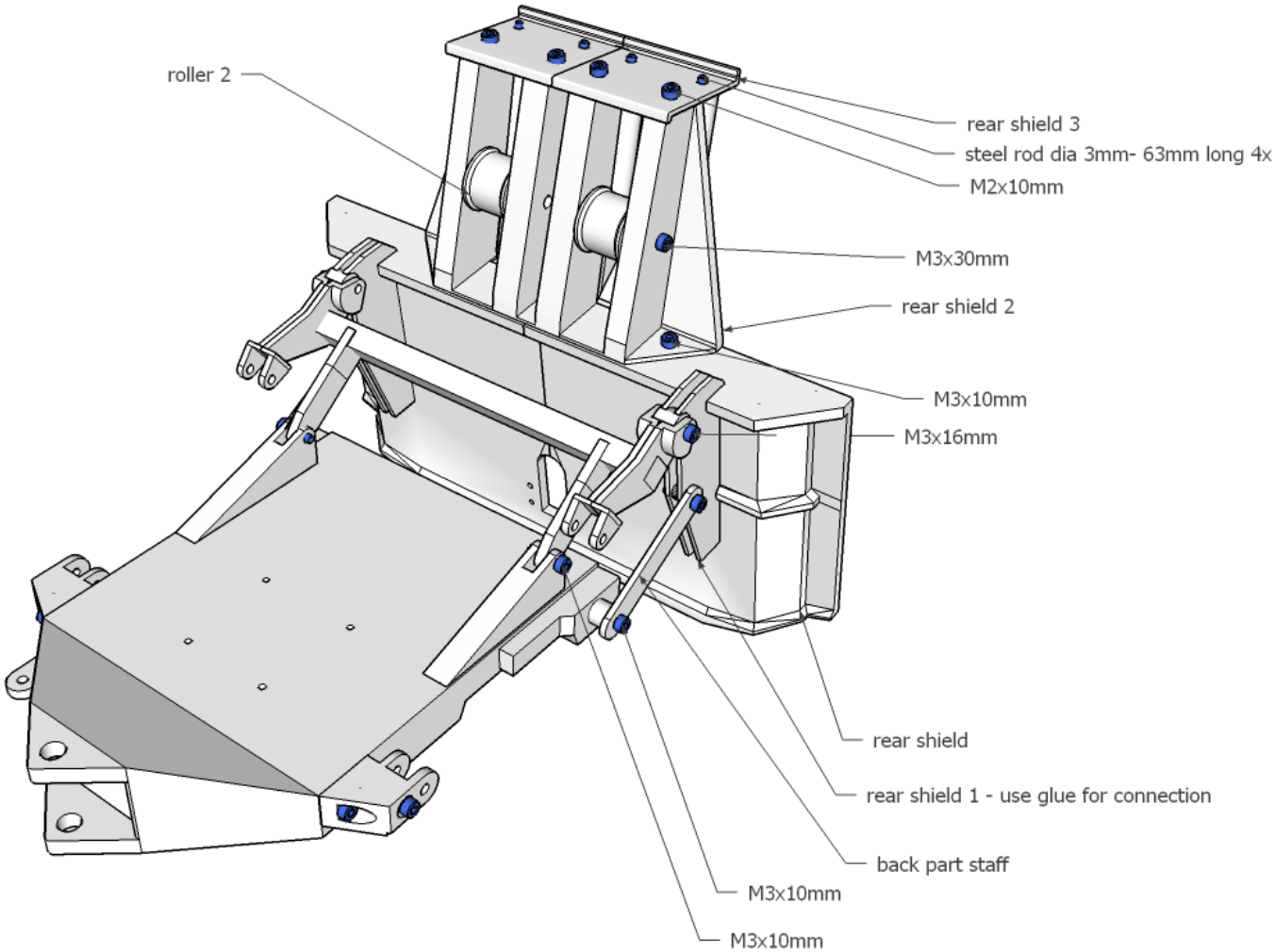
roller 2
rear shield 3
steel rod dia 3mm- 63mm long 4x
M2x10mm
M3x30mm
rear shield 2
M3x10mm
M3x16mm
rear shield
rear shield 1 - use glue for connection
back part staff
M3x10mm
M3x10mm

Step 10

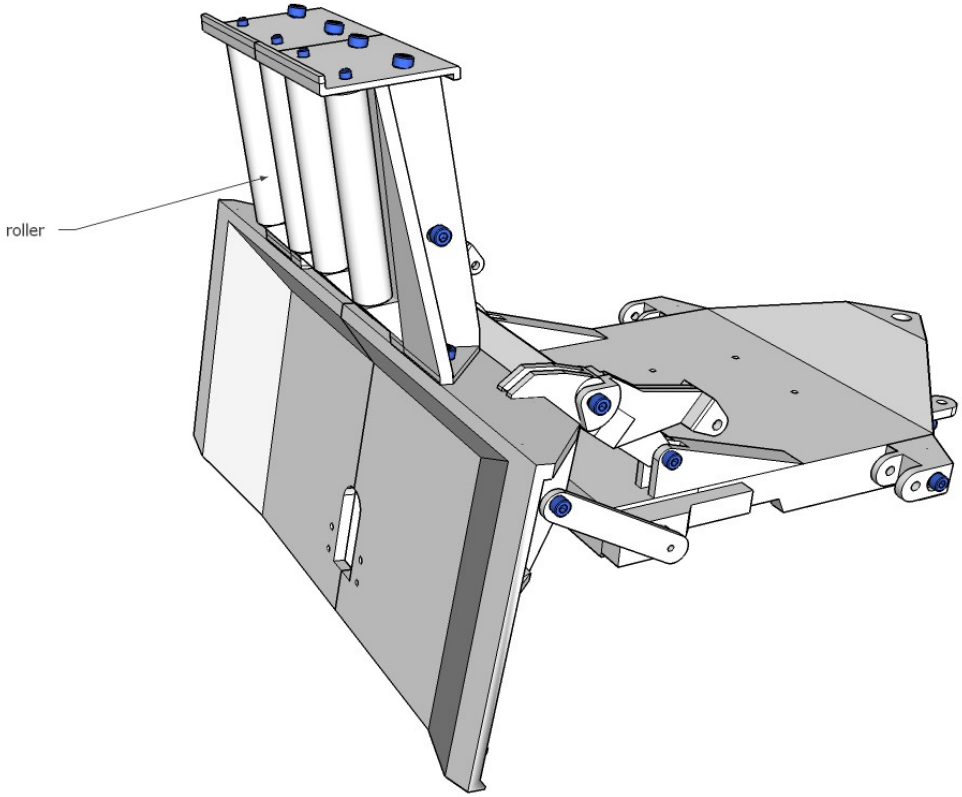

Step 11

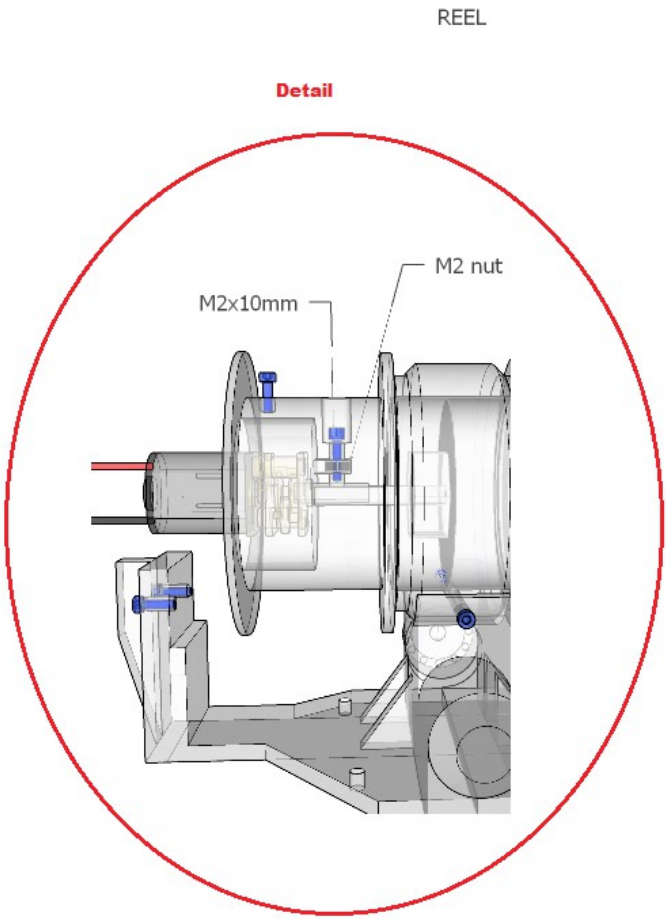
REEL
Detail
M2 nut
M2x10mm

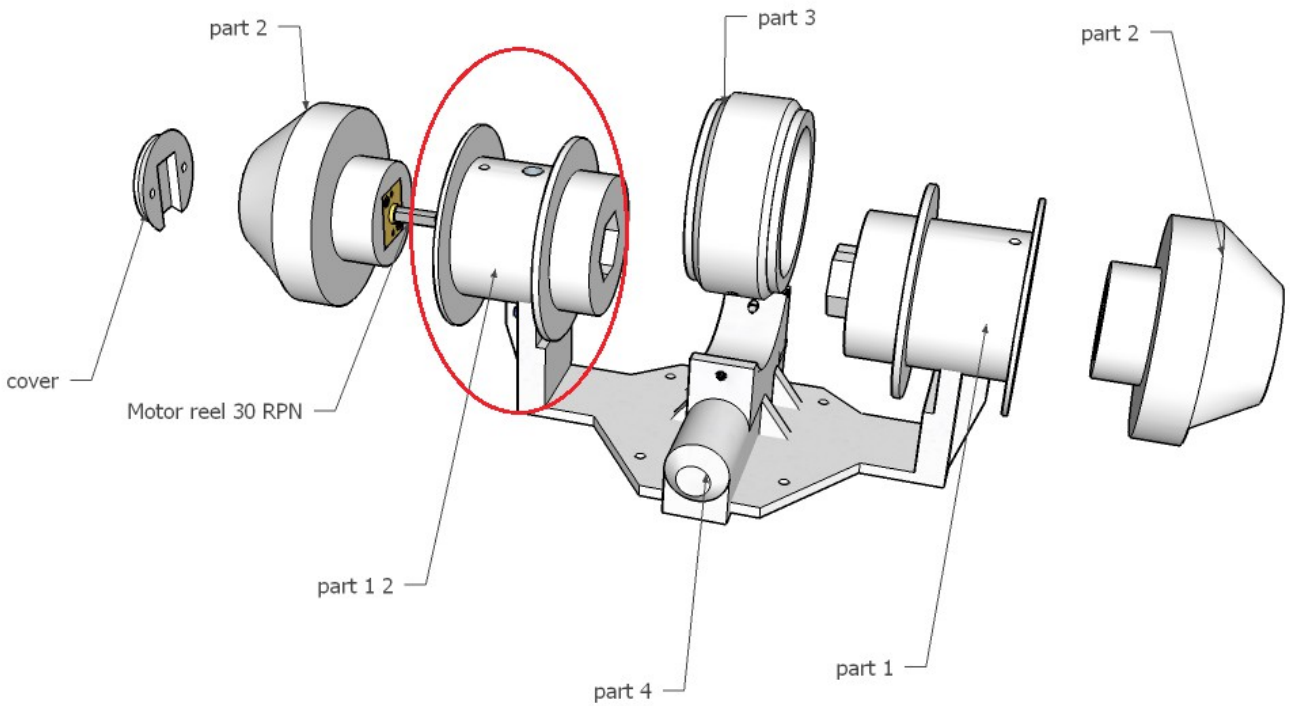
part 2
part 3
part 2
cover
Motor reel 30 RPN
part 1 2
part 4
part 1

Step 12

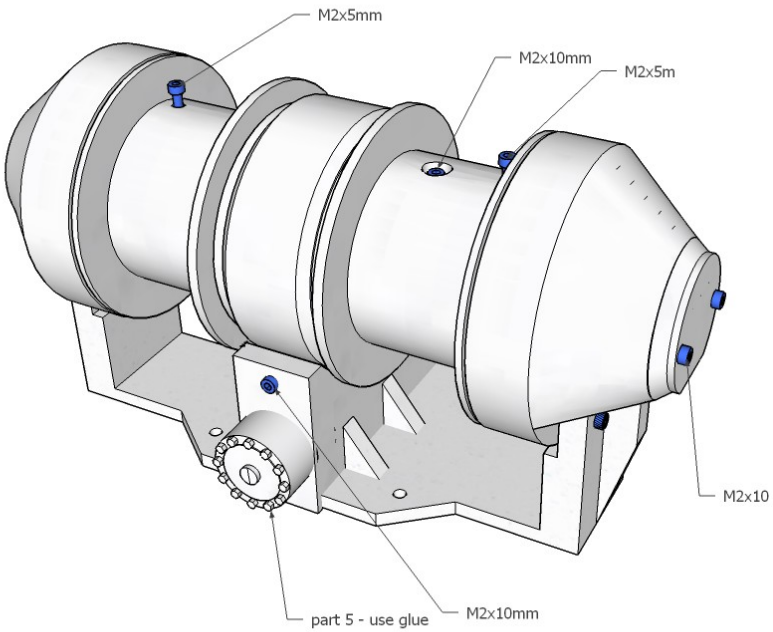

Step 13

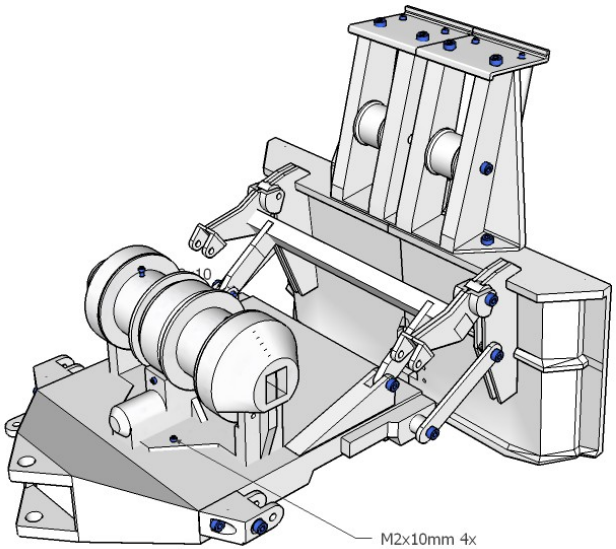

Step 14

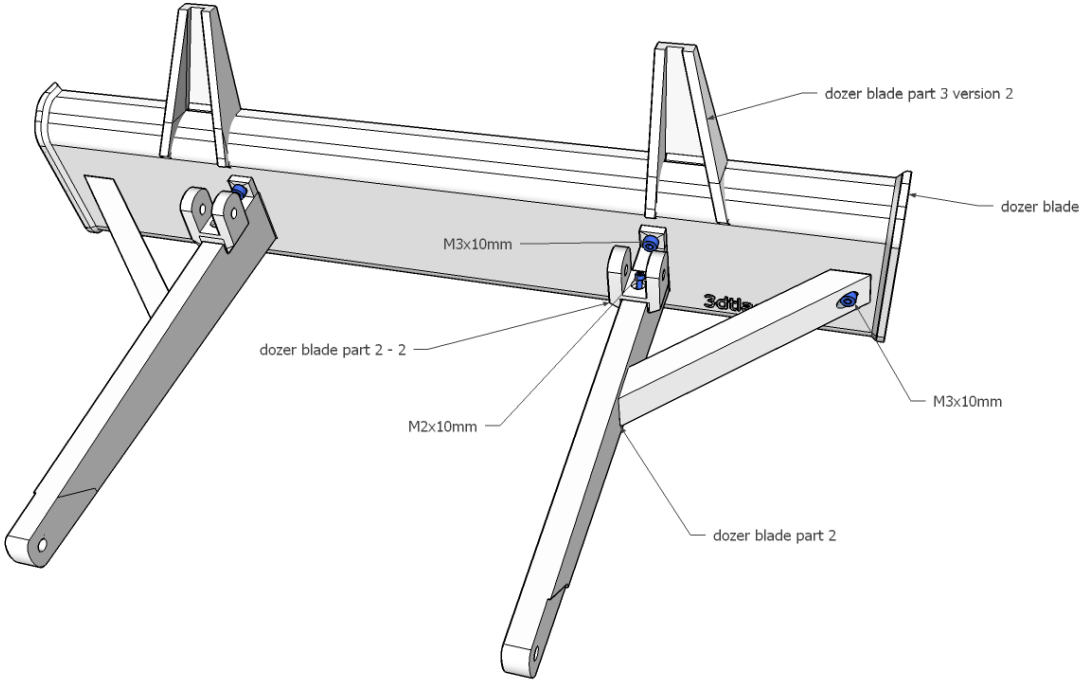
dozer blade part 3 version 2
dozer blade
M3x10mm
dozer blade part 2 - 2
M2x10mm
M3x10mm
dozer blade part 2

Step 15

Piston assembly.
the principle is the same for all pistons / front and back
i use PLA material for all parts
don´t use support for this parts

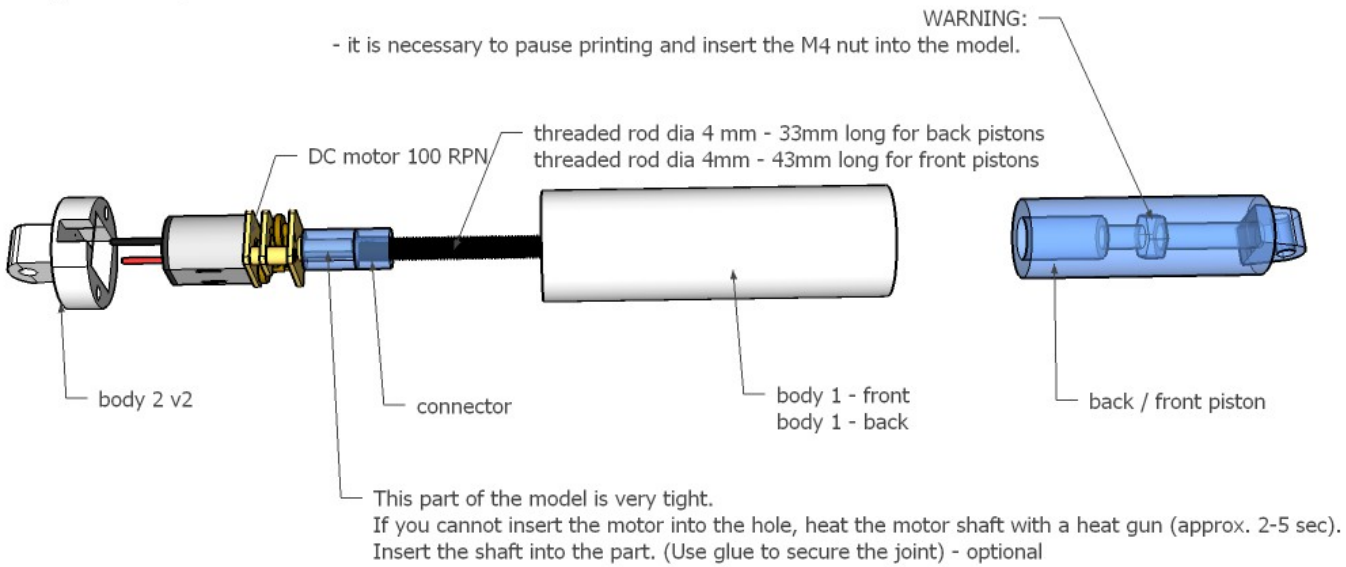

Step 16

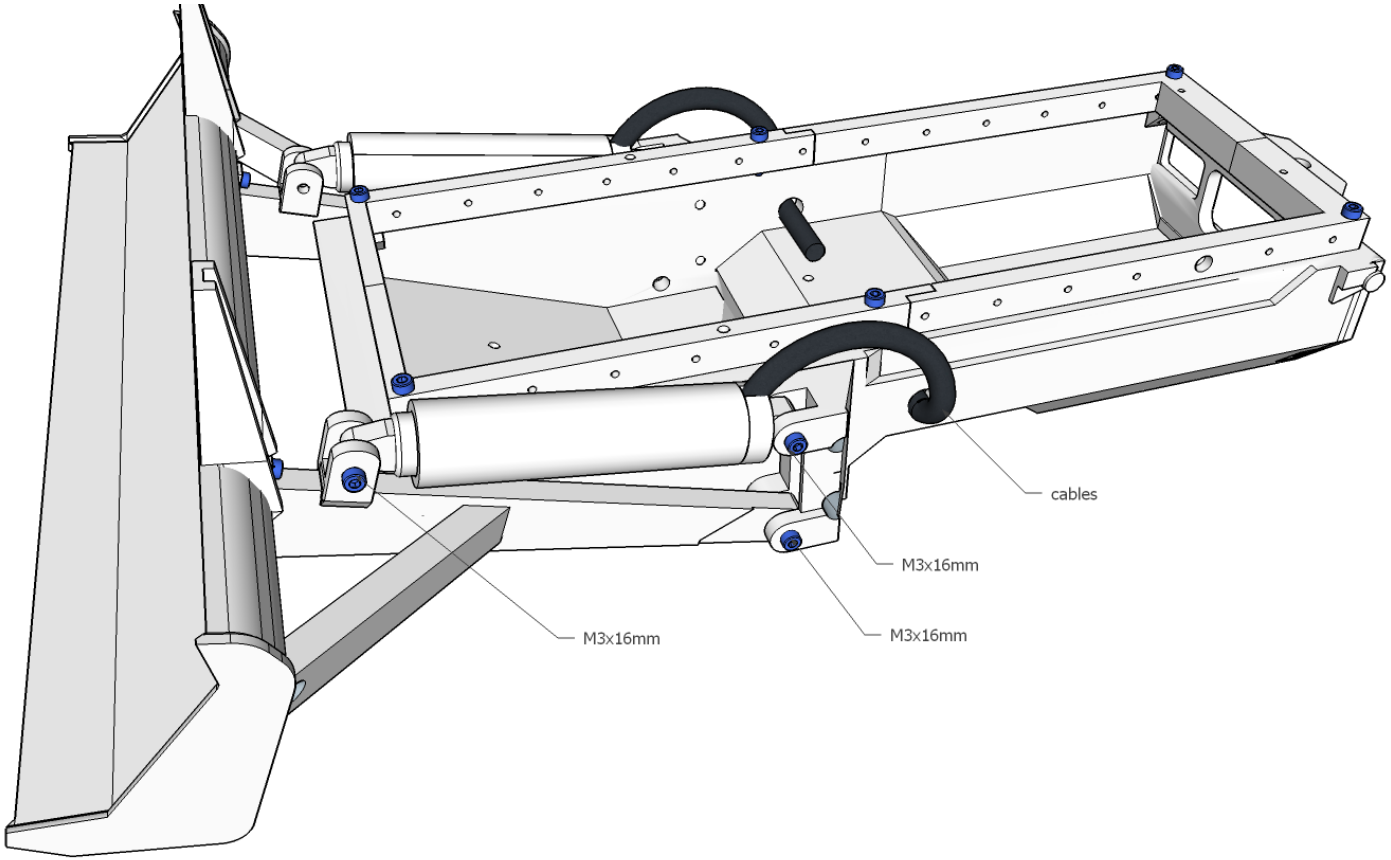

Step 17

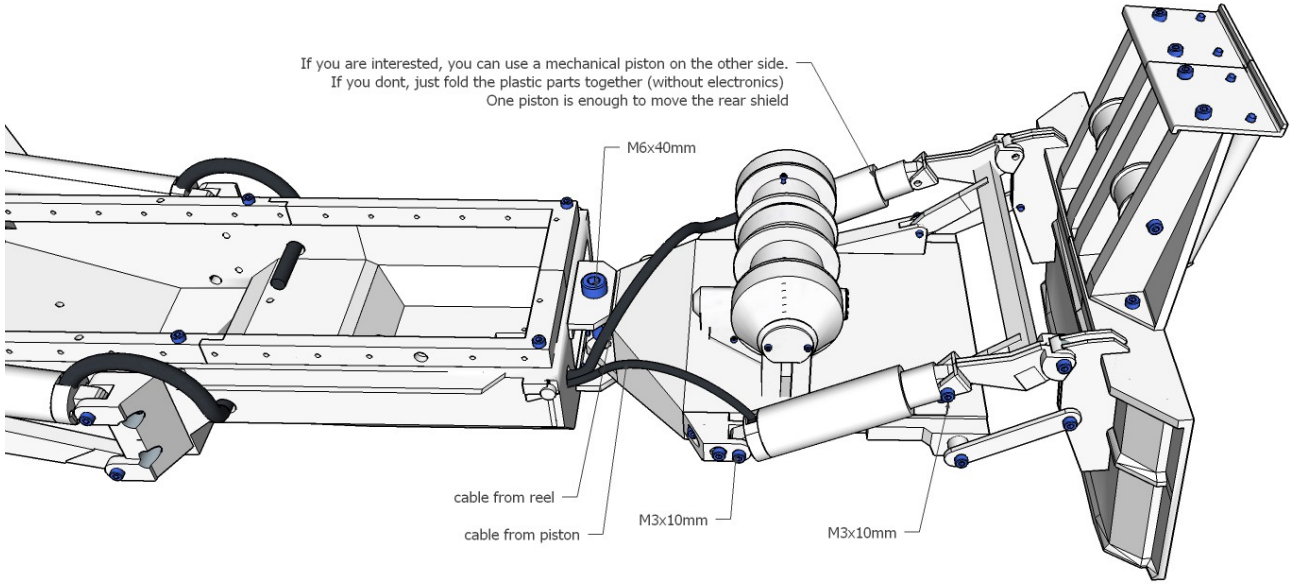
If you are interested, you can use a mechanical piston on the other side.
If you dont, just fold the plastic parts together (without electronics)
One piston is enough to move the rear shield
M6x40mm
cable from reel
cable from piston
M3x10mm
M3x10mm

Step 18

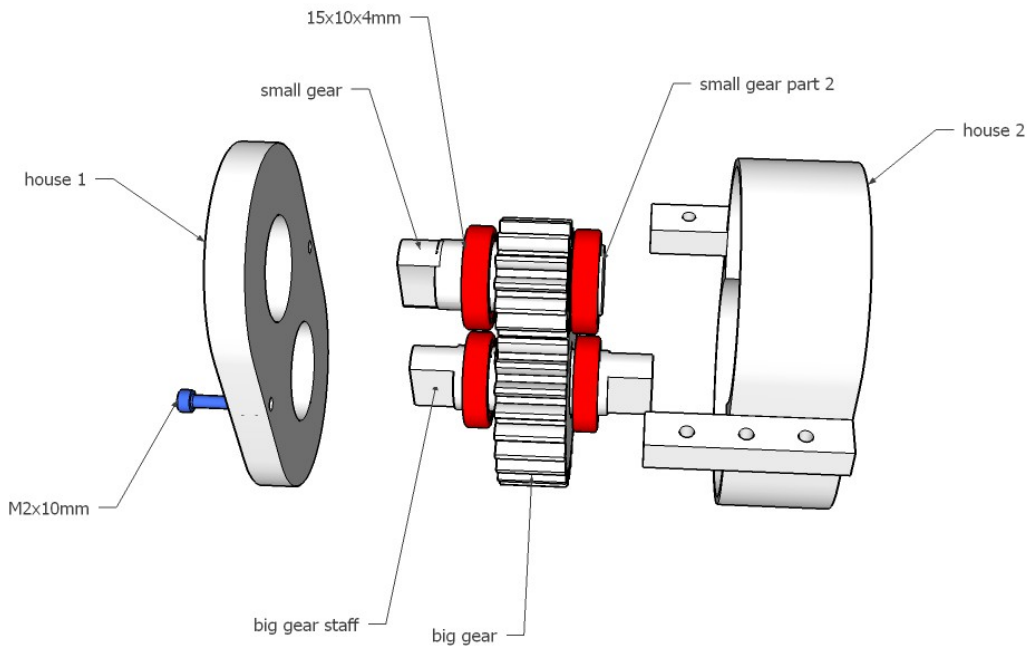
15x10x4mm
small gear
small gear part 2
house 2
house 1
M2x10mm
big gear staff
big gear

Step 19

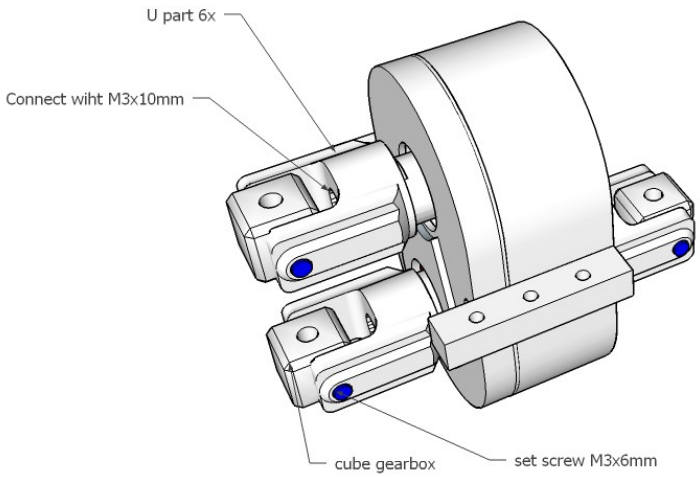
U part 6x
Connect wiht M3x10mm
cube gearbox
set screw M3x6mm

Step 20

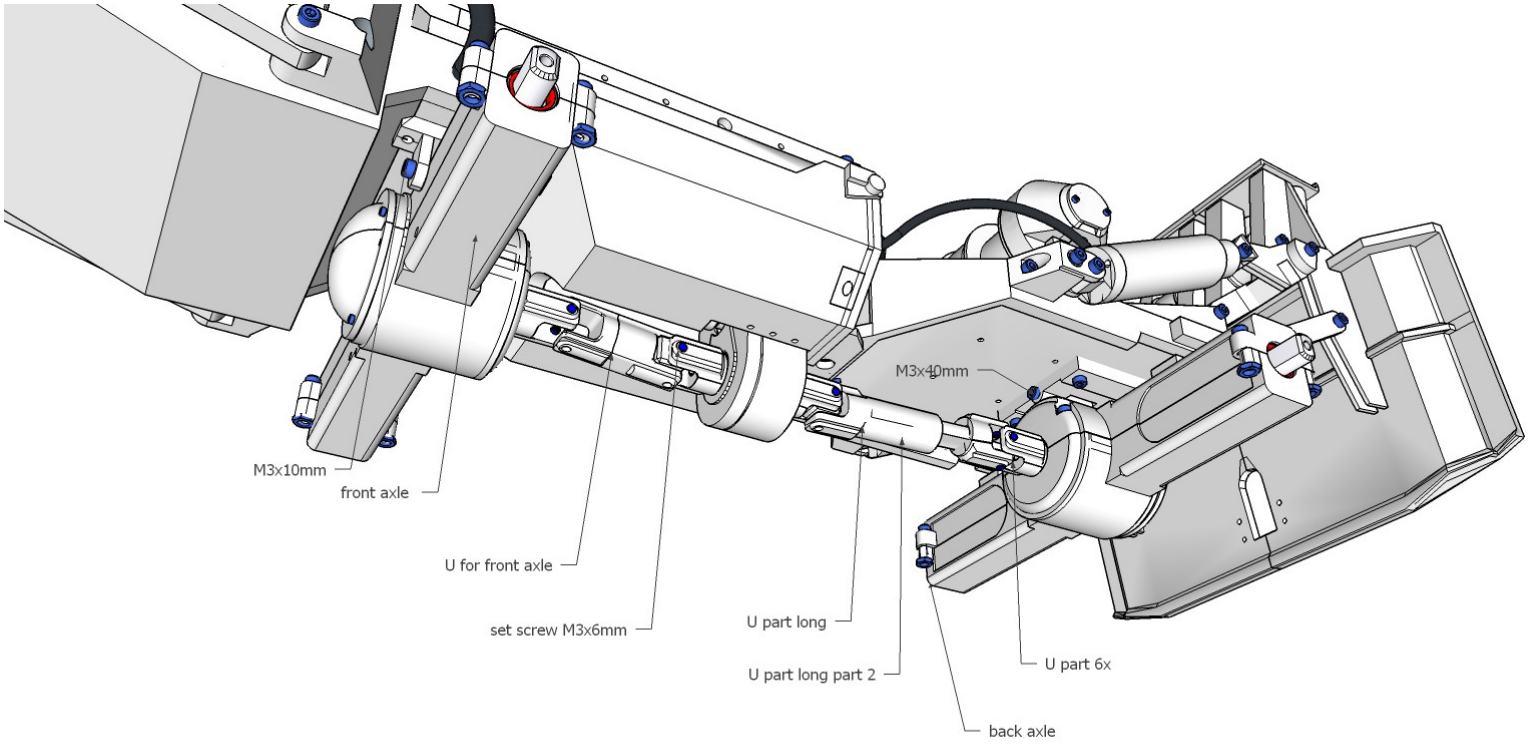
M3x10mm
front axle
U for front axle
set screw M3x6mm
M3x40mm
U part long
U part long part 2
U part 6x
back axle

Step 21

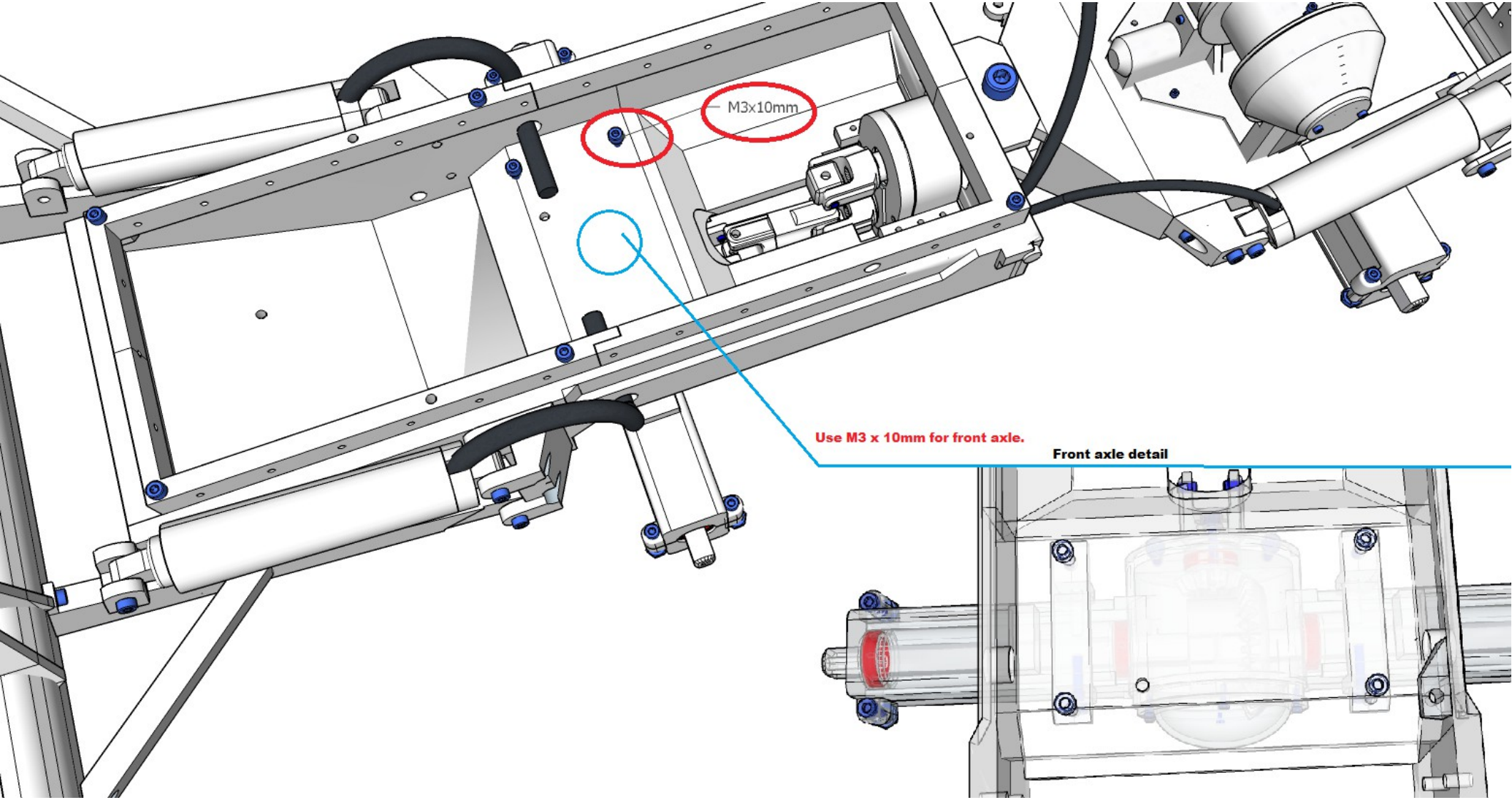

Step 22

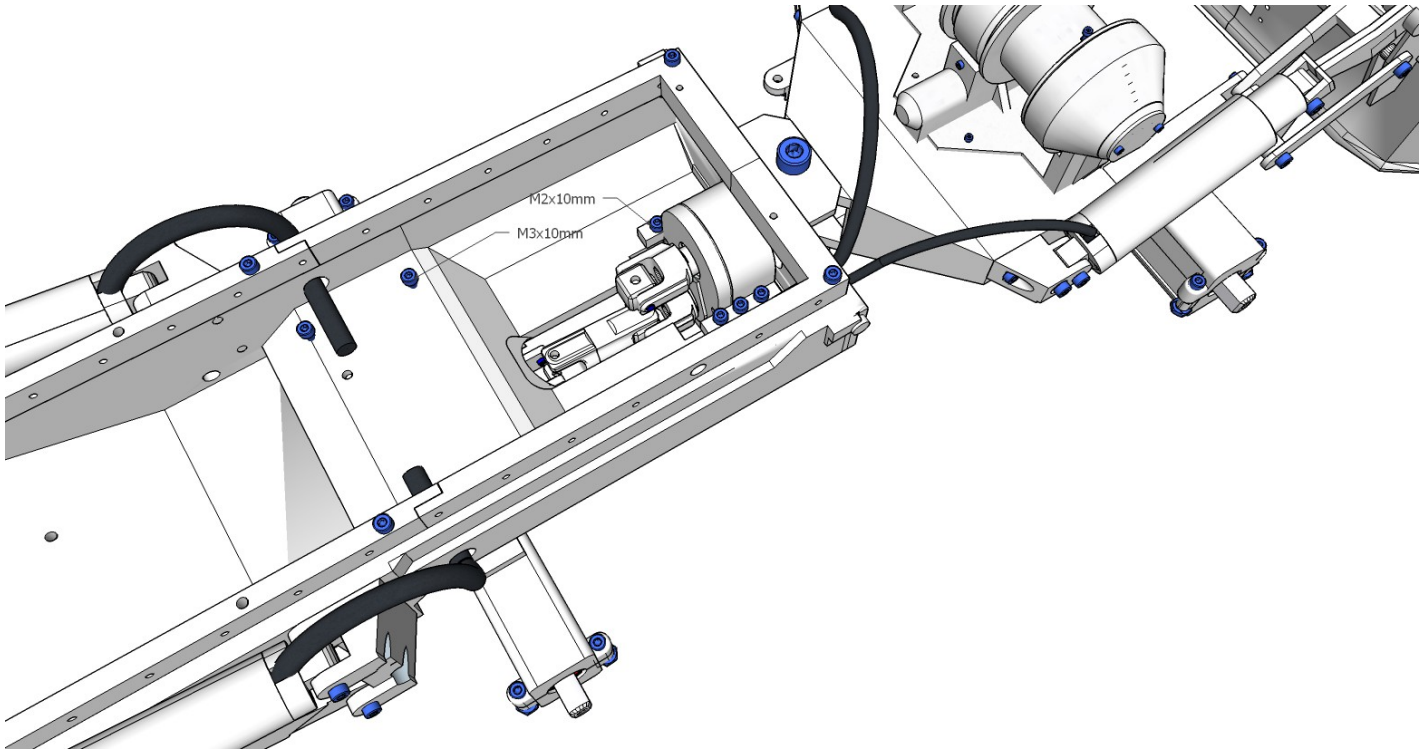

Step 23

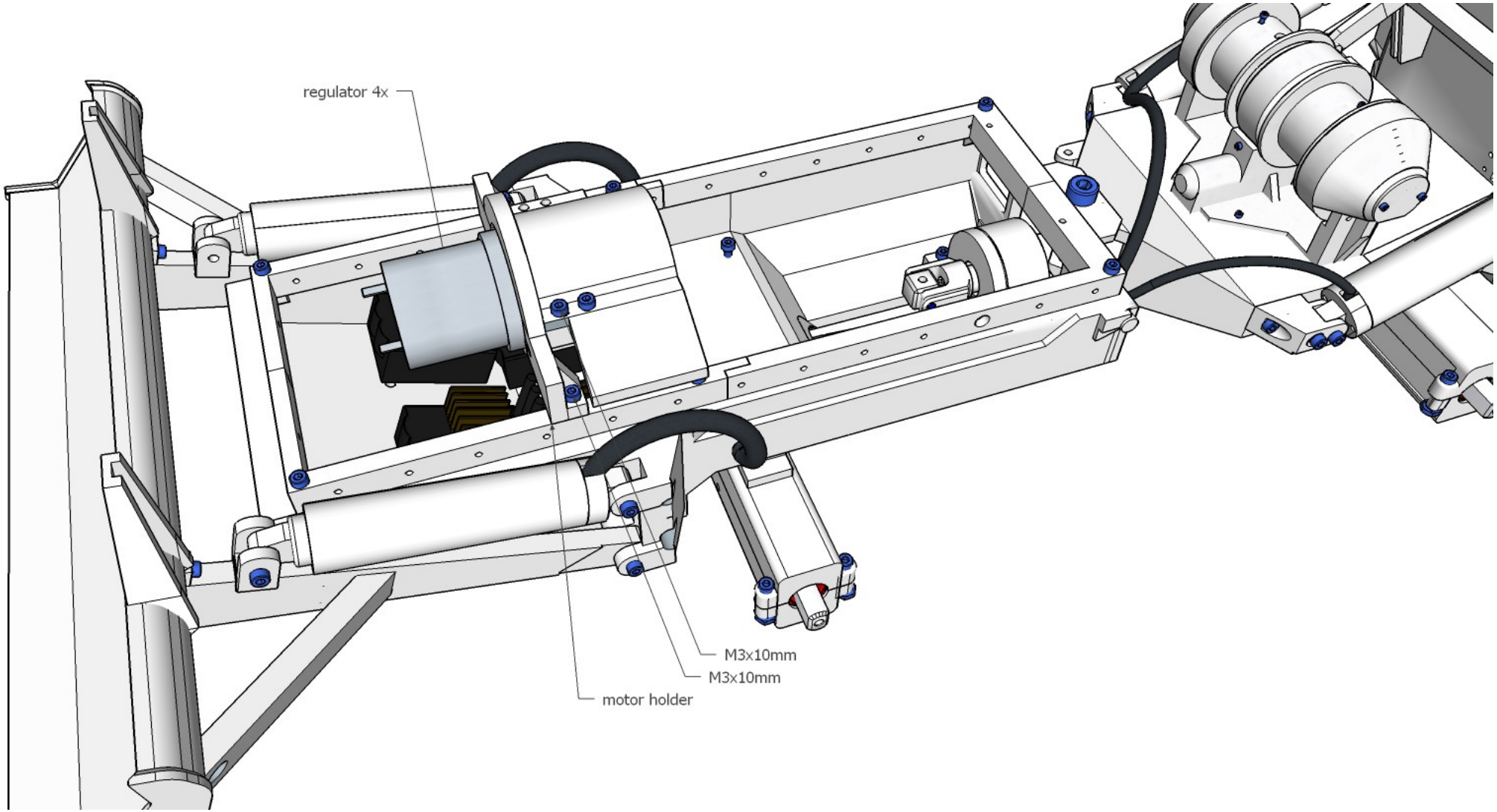

Step 24

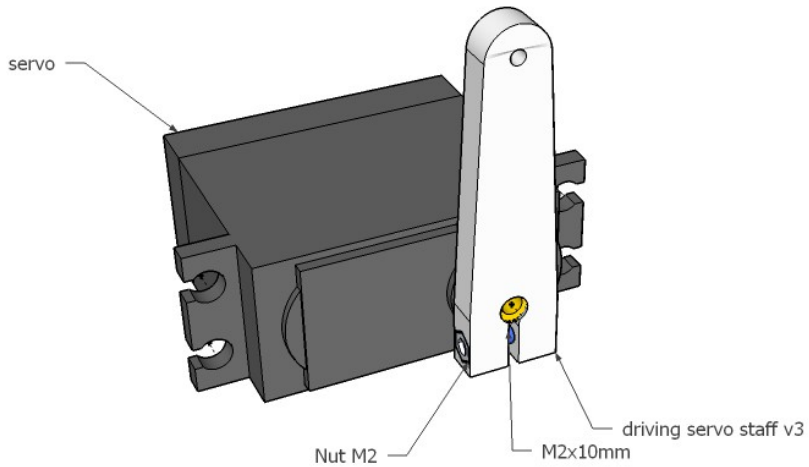

Step 25

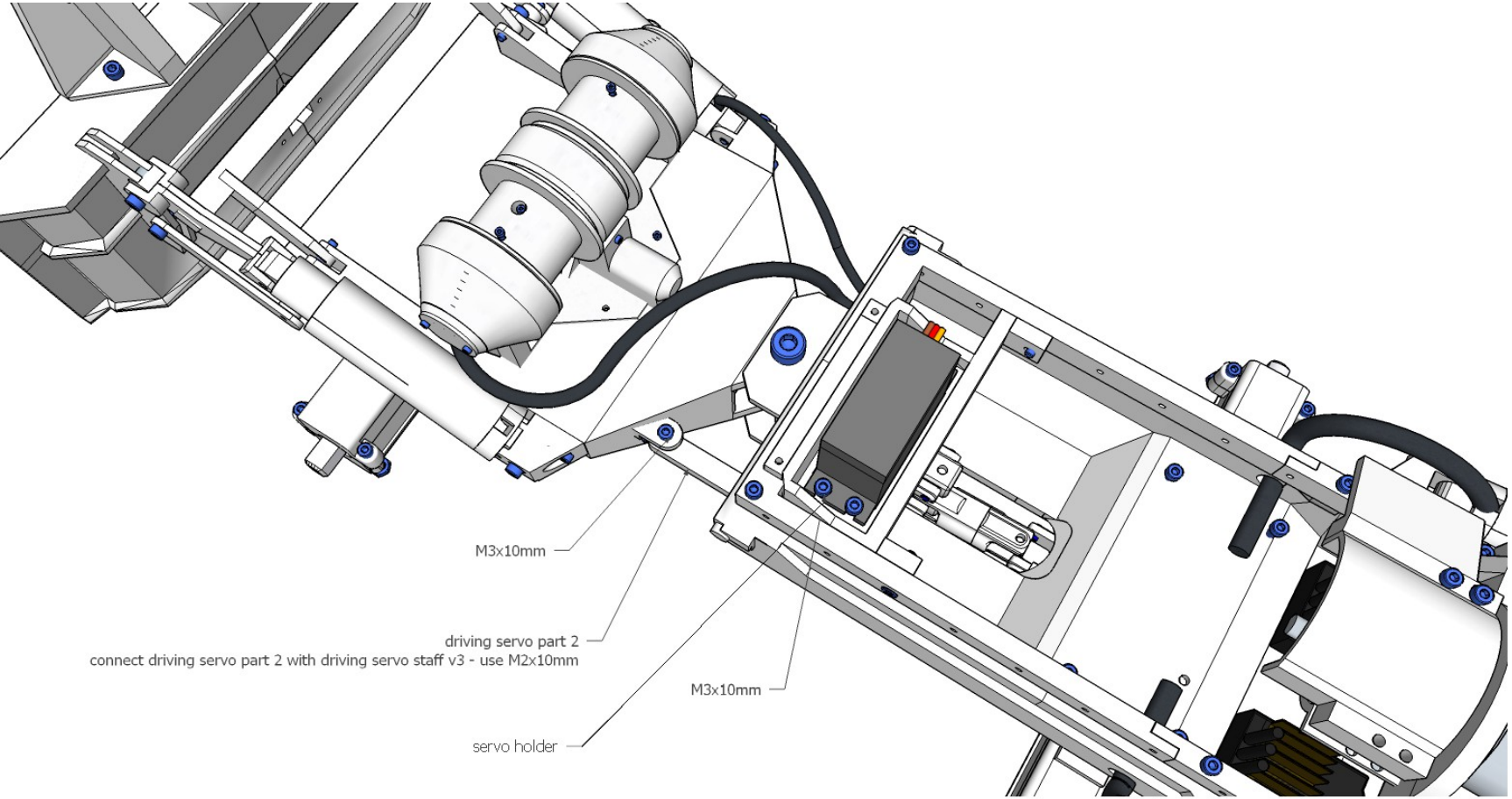
M3x10mm
driving servo part 2
connect driving servo part 2 with driving servo staff v3 - use M2x10mm
M3x10mm
servo holder

Step 26

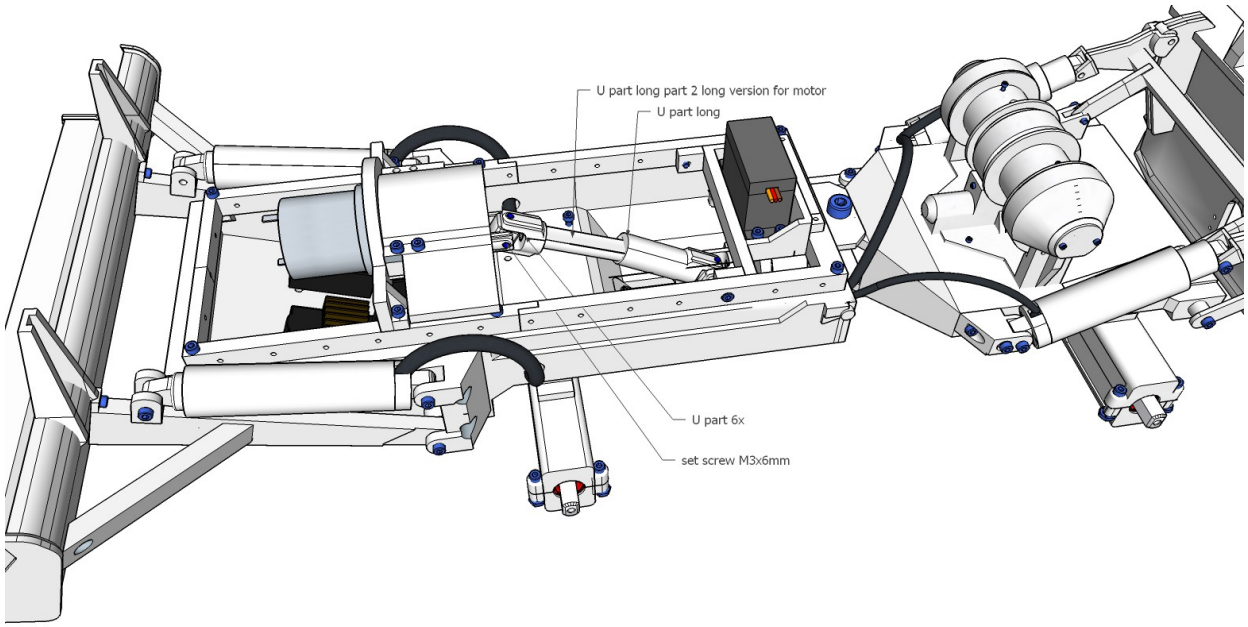
U part long part 2 long version for motor
U part long
U part 6x
set screw M3x6mm

Step 27

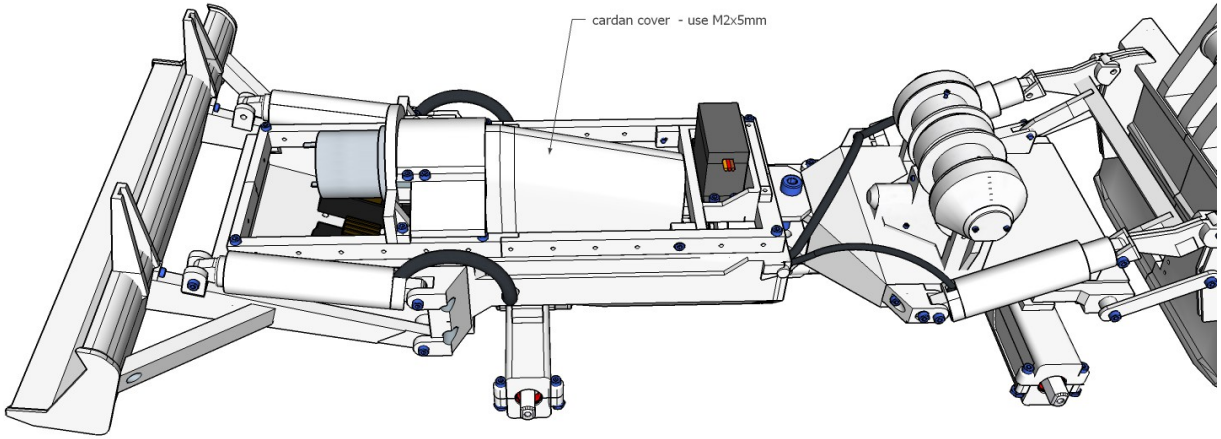

Step 28

Connect all electronic parts together. The front pistons are connected to one + and - cable.
Use one regulator for the front pistons, one regulator for the reel, one regulator for the rear piston.
Connect all controllers to one On / Off switch.
Combines all controllers into one circuit for battery cable + and -.
Connect all controllers to the receiver and also the servo. If you have lights, plug them in as well.

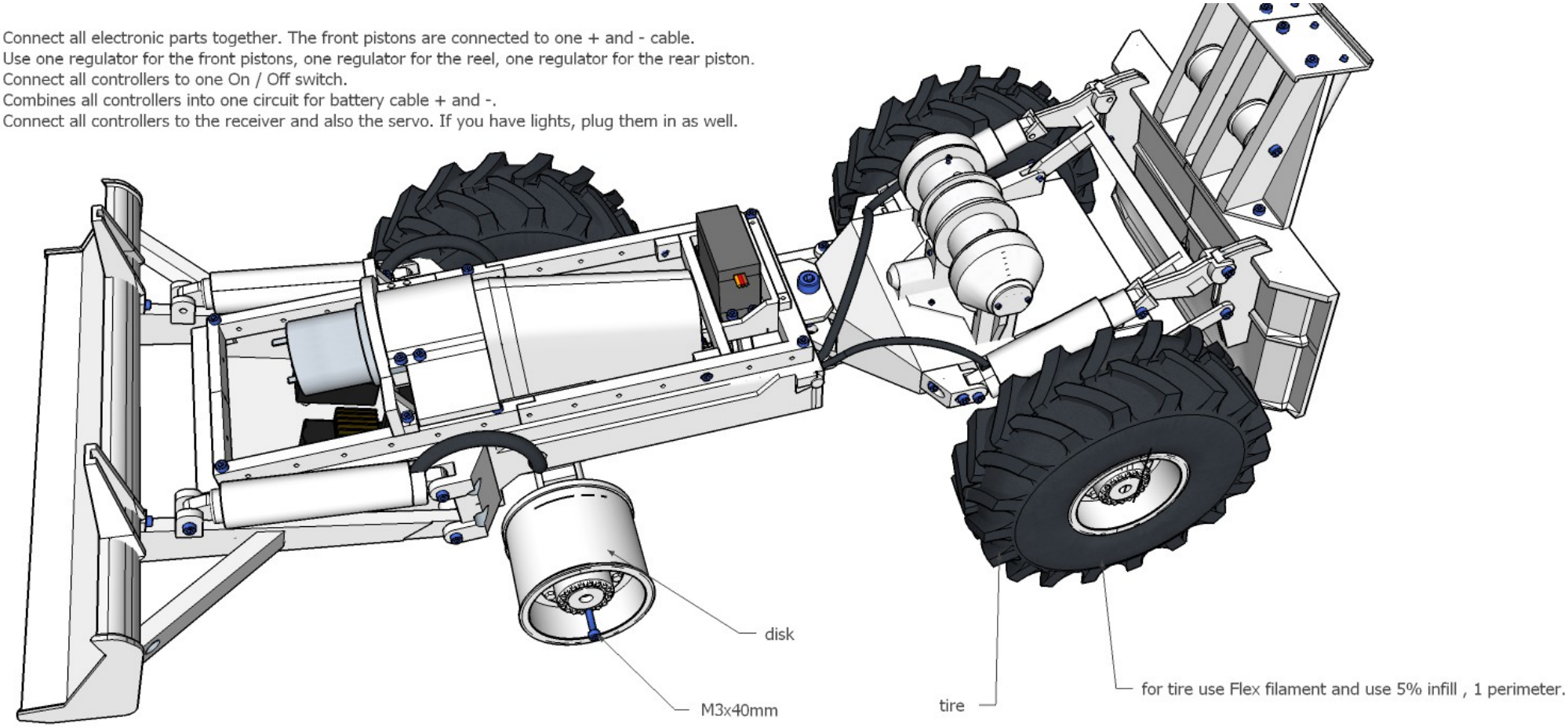

Step 29

- RELAX NOW

Step 30

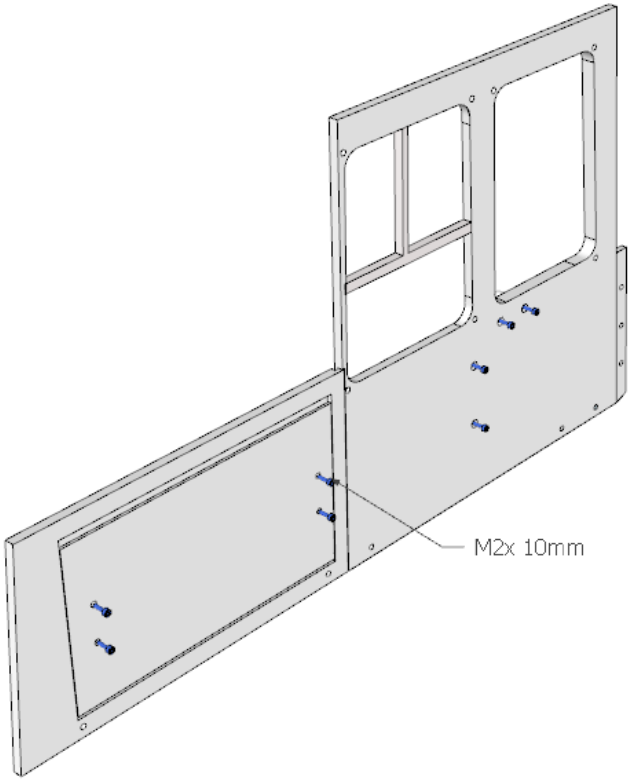

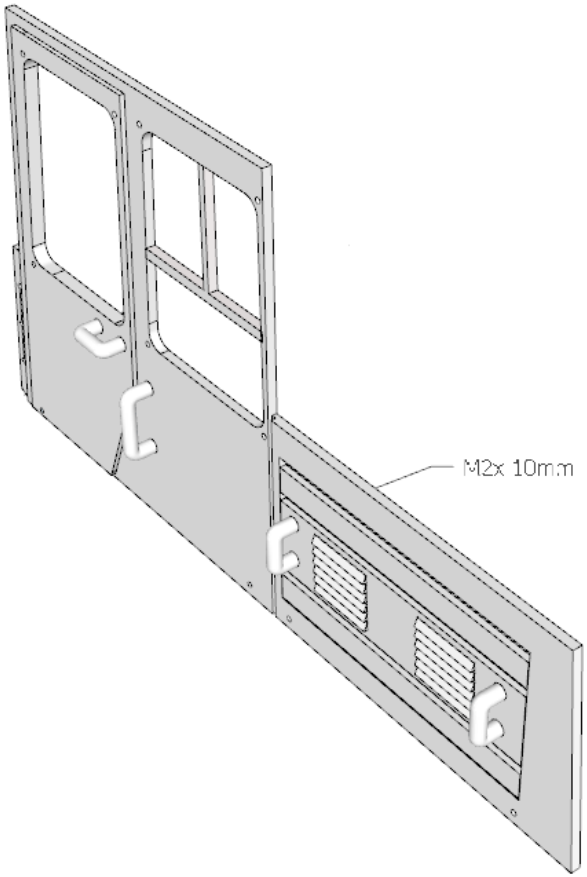

Step 31

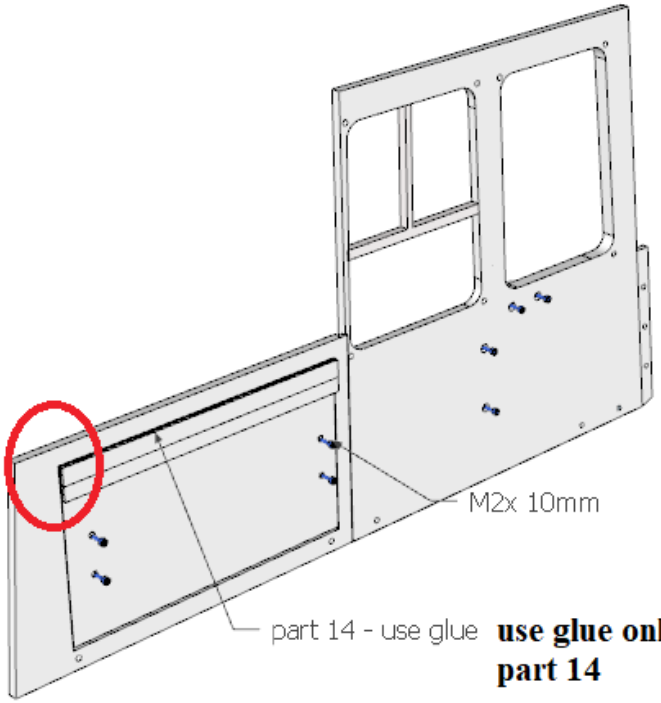

use glue only for this part 14

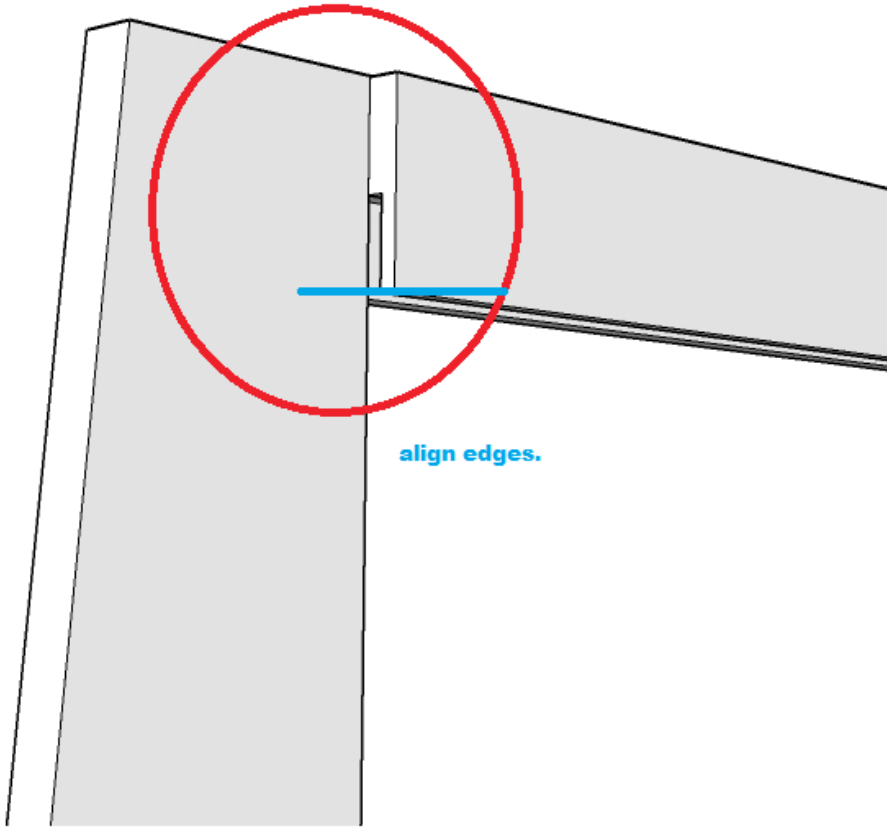

Step 32

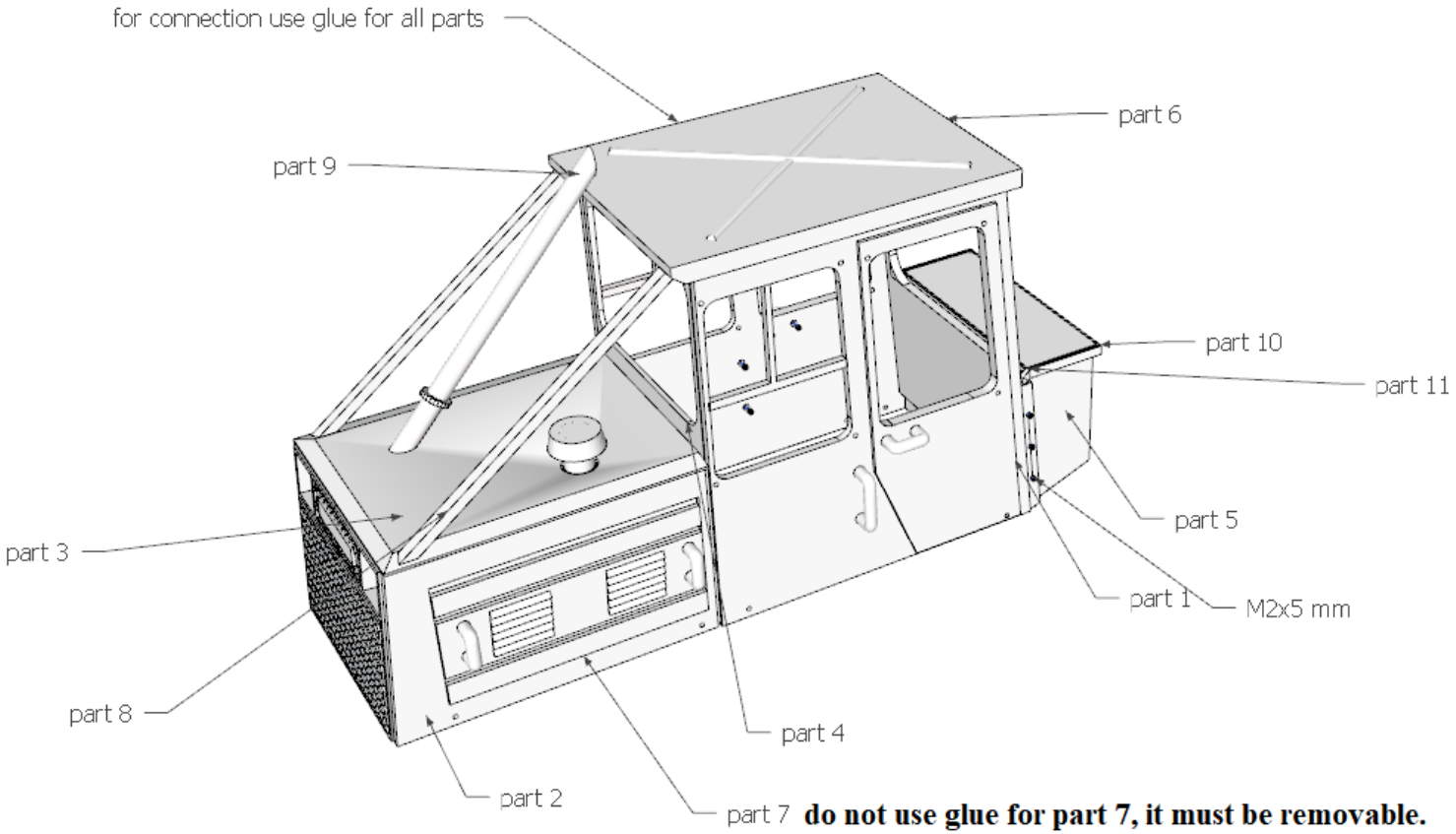

do not use glue for part 7, it must be removable.

Step 33

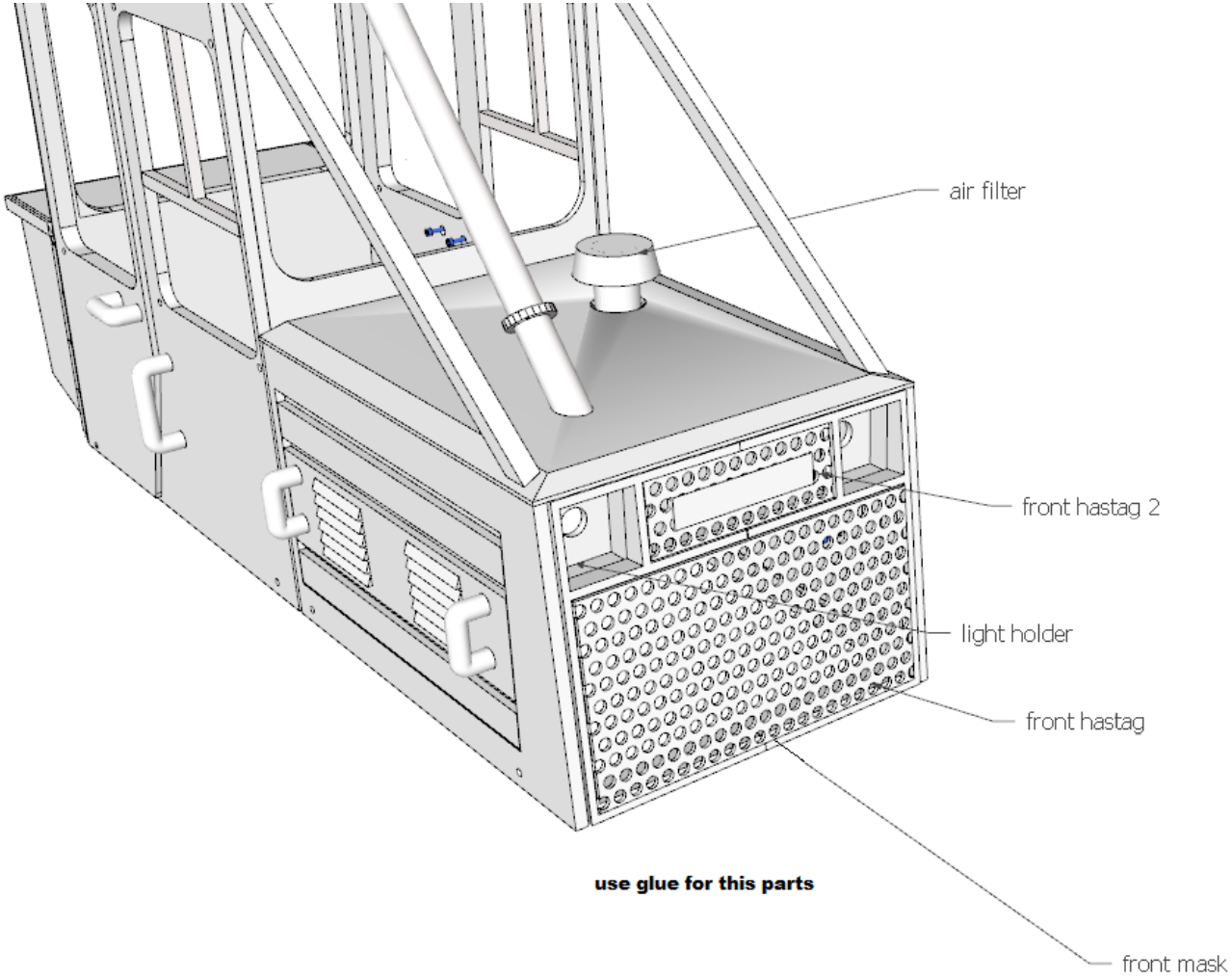
air filter
front hastag 2
light holder
front hastag
use glue for this parts
front mask

Step 34

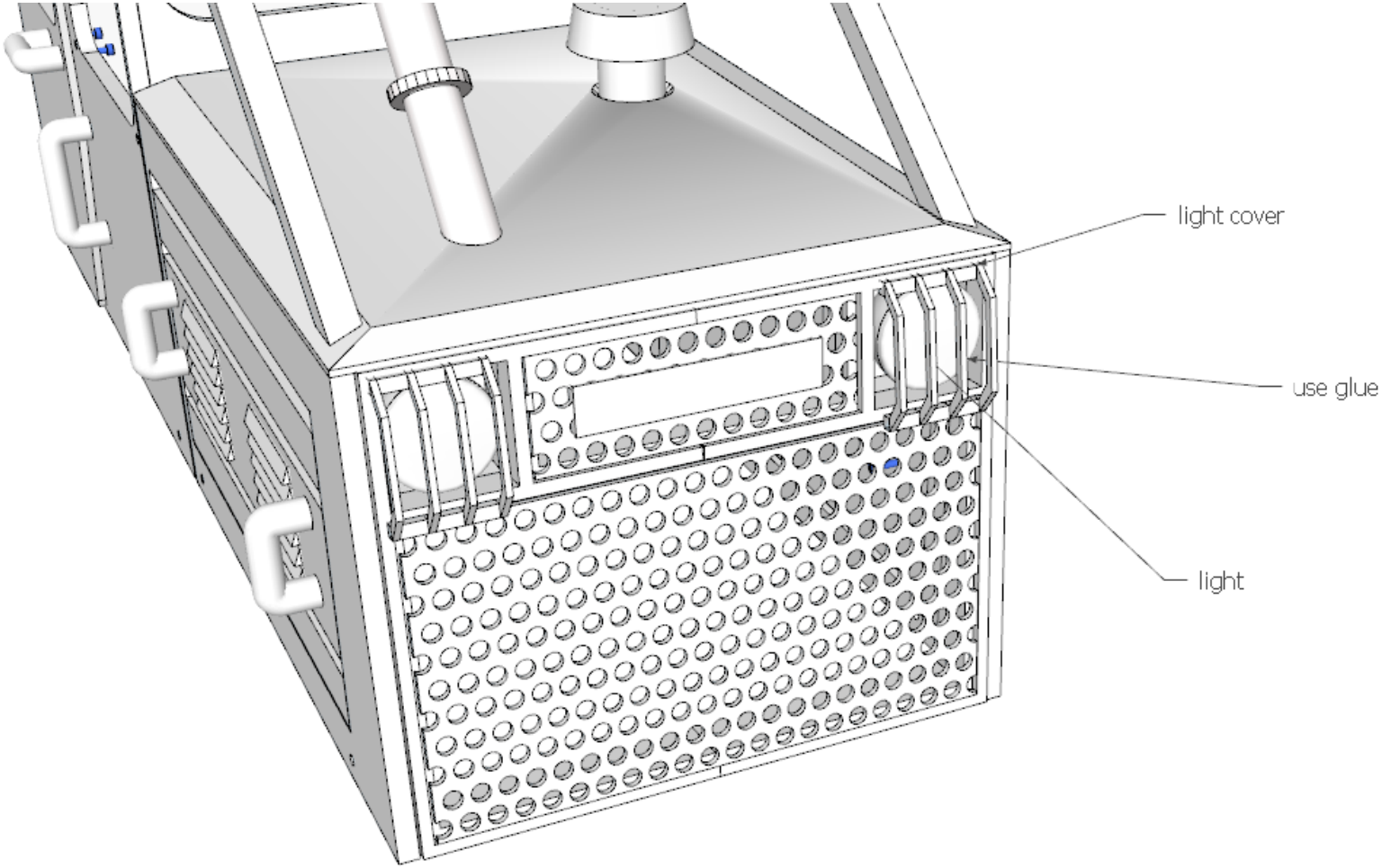

Step 35

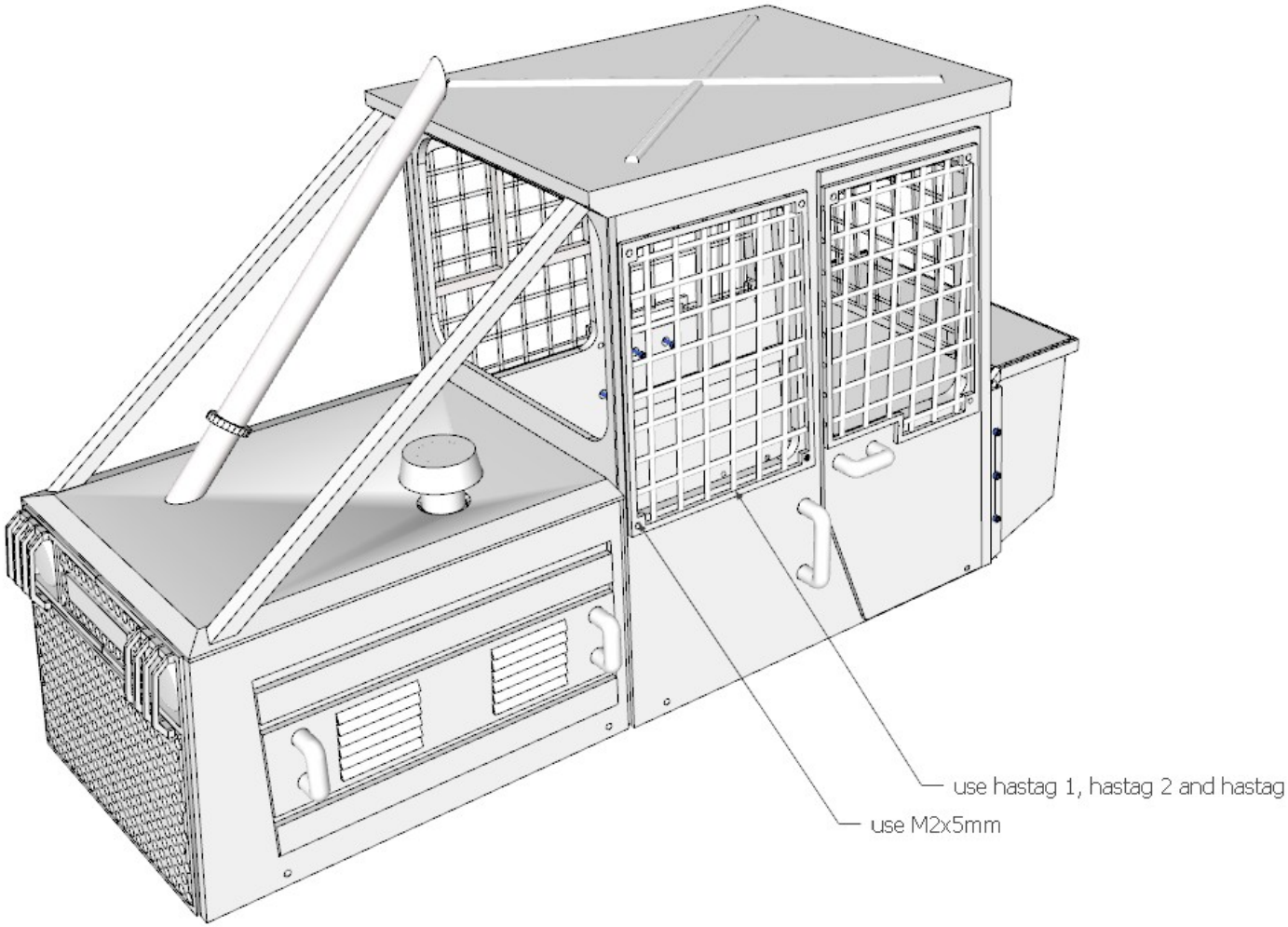

Step 36

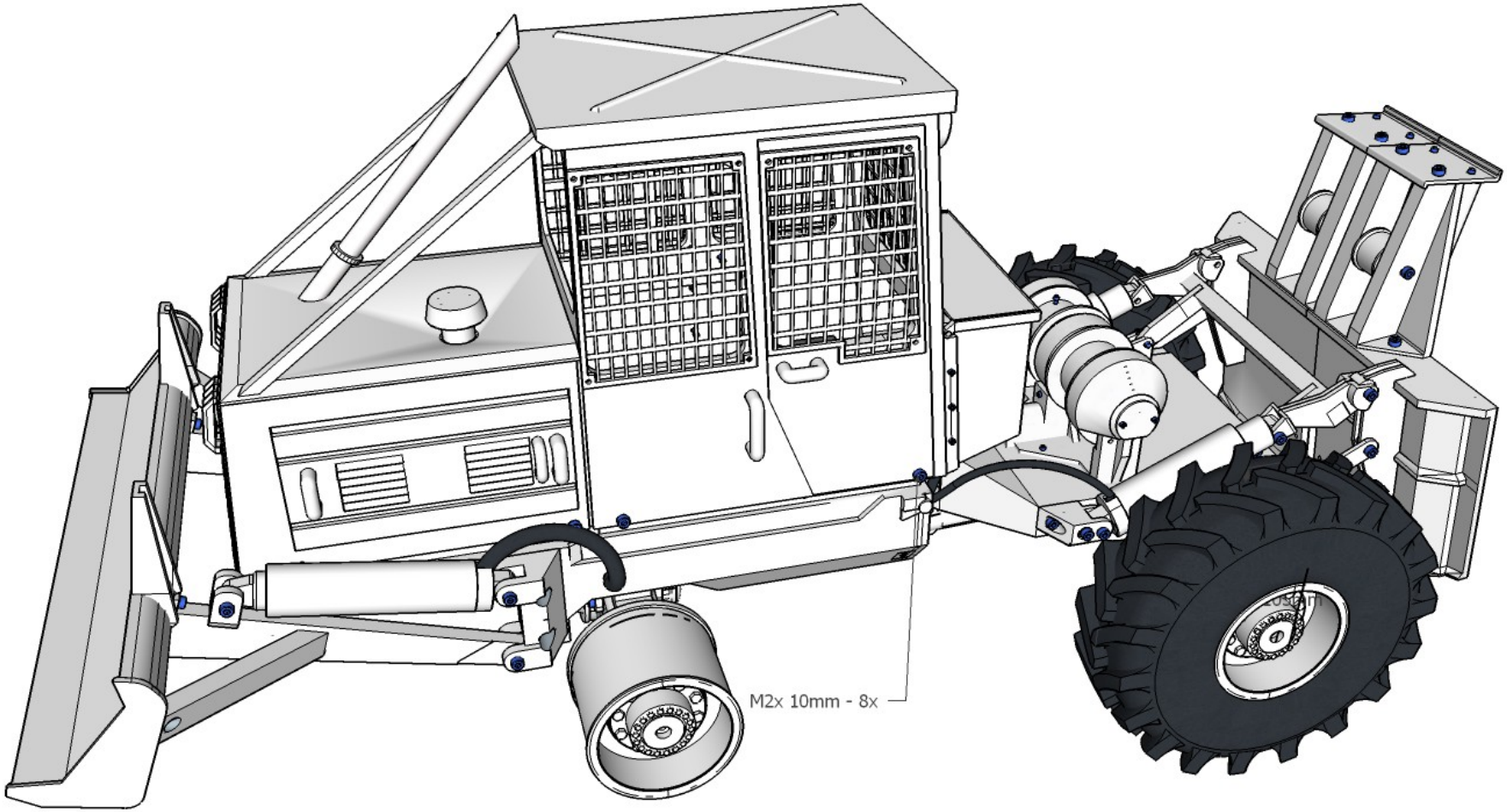

FINAL