BMP 1 1/16 SCALE

A few words about the building .....
I use PLA (Plasty Mladeč)

I recommend a layer of 0.2 mm, just 40% fill.
For axle use 5 perimeters

You will need:

- contains 4 bearings 10x15x4
- screws M3 x 10 mm - 15 pcs
- screws M3 x 16 mm – 20pcs
- screws M3 x 20 mm – 4pcs
- screws M2 x 5 mm – 50pcs
- screws M2 x 10 mm – 50pcs
- Servo 360° https://www.laskakit.cz/plastove-micro-servo-sg90-9g--kontinualni/
- ENGINE : https://www.laskakit.cz/motor-jga25-370-12v-s-prevodovkou-/?variantId=6861
  i use 60RPN
- Batery for RC model
  https://www.conrad.sk/p/droneart-akupack-li-pol-111-v-1300-mah-pocet-clankov-3-75-c-softcase-xt60-17
- Regulator for engine

  https://www.conrad.sk/p/reely-40a-auto-brushed-zatazitelnost-max-180-a-limit-motora-otacky-12-160032
- CONTROL:
  https://www.conrad.sk/p/reely-ht-5-rucne-dialkove-ovladanie-24-ghz-kanalov-5-vr-prijimaca-1414497
- Steel rod dia 1,5mm – 20cm
- SPRINGS
  https://www.motora.sk/naradie/spotrebny-material-informacie/spotrebny-material-na-opravu-a-udrzbu-br

Turret

There are 3 types of turrets to choose from

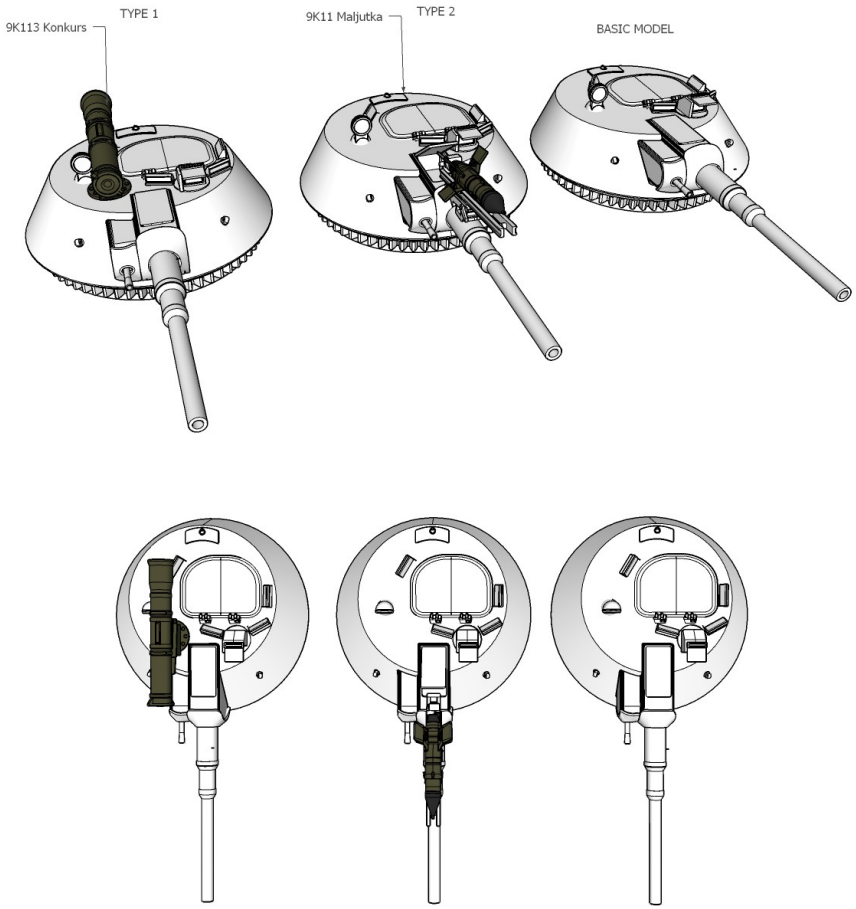

Step 1

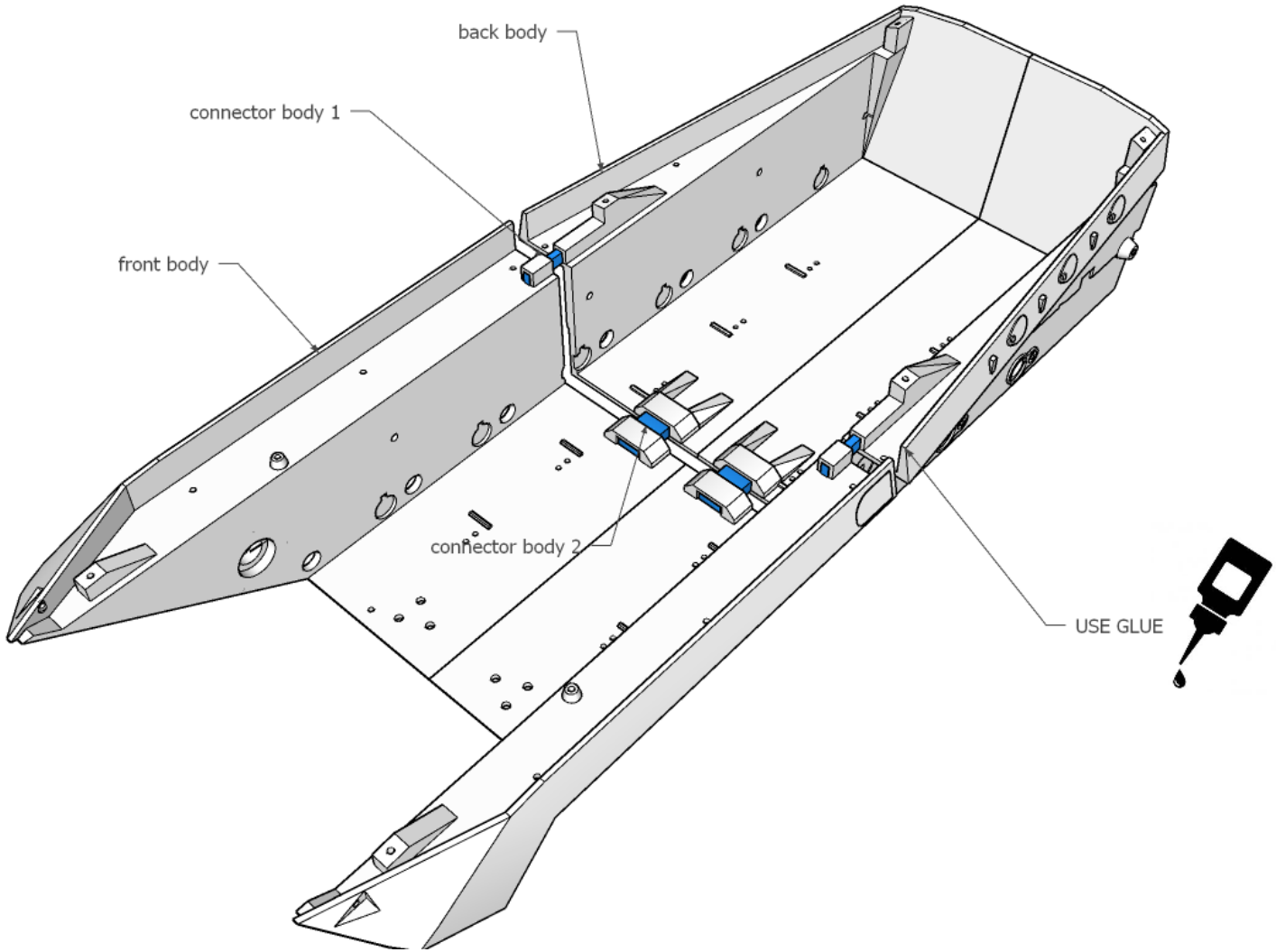
back body
connector body 1
front body
connector body 2
USE GLUE

Step 2

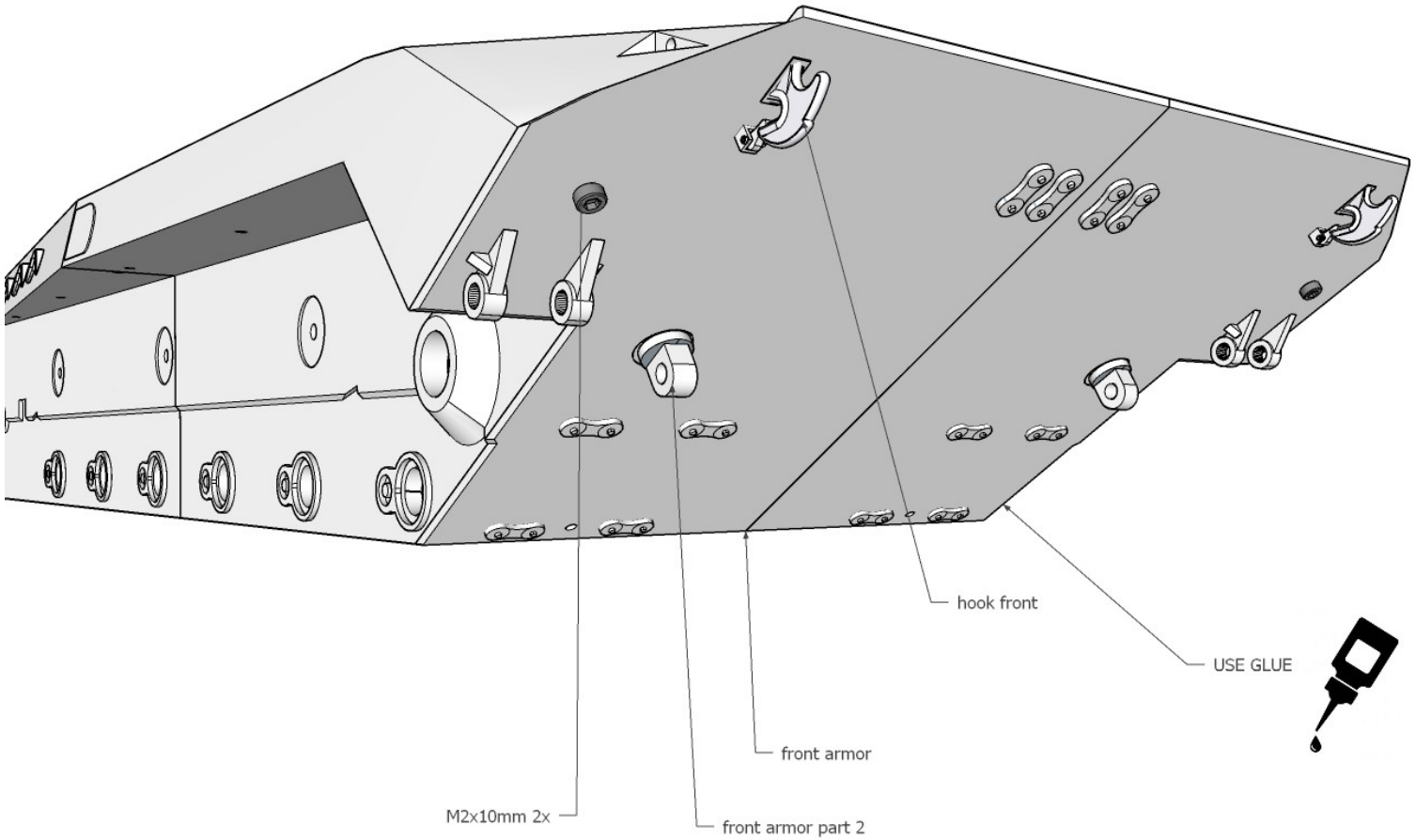
hook front
USE GLUE
front armor
M2x10mm 2x
front armor part 2

Step 3

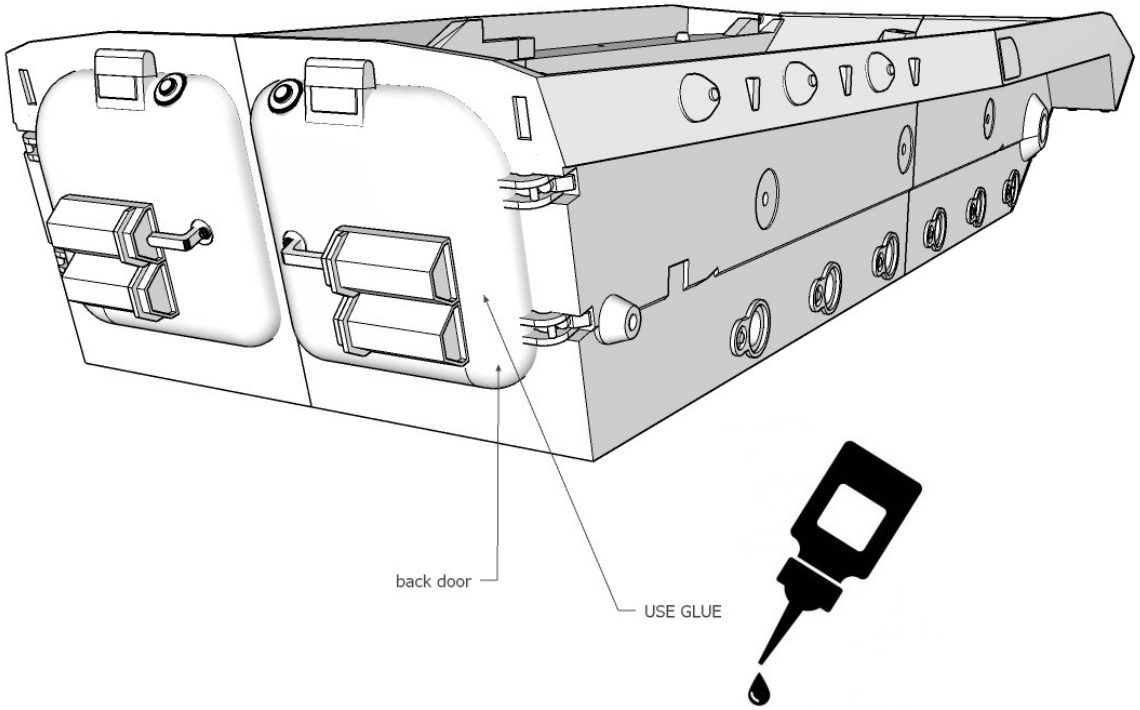

Step 4

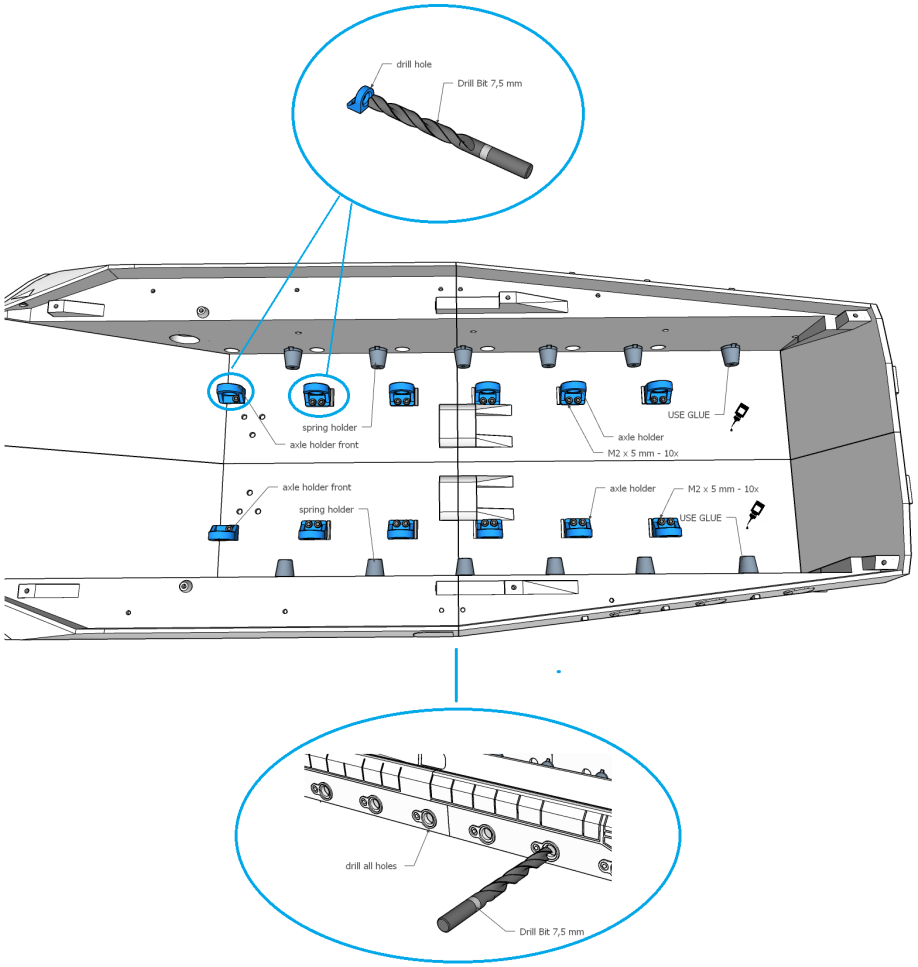
drill hole
Drill Bit 7,5 mm
spring holder
axle holder front
axle holder
M2 x 5 mm - 10x
USE GLUE
axle holder front
spring holder
axle holder
M2 x 5 mm - 10x
USE GLUE
drill all holes
Drill Bit 7,5 mm

Step 5

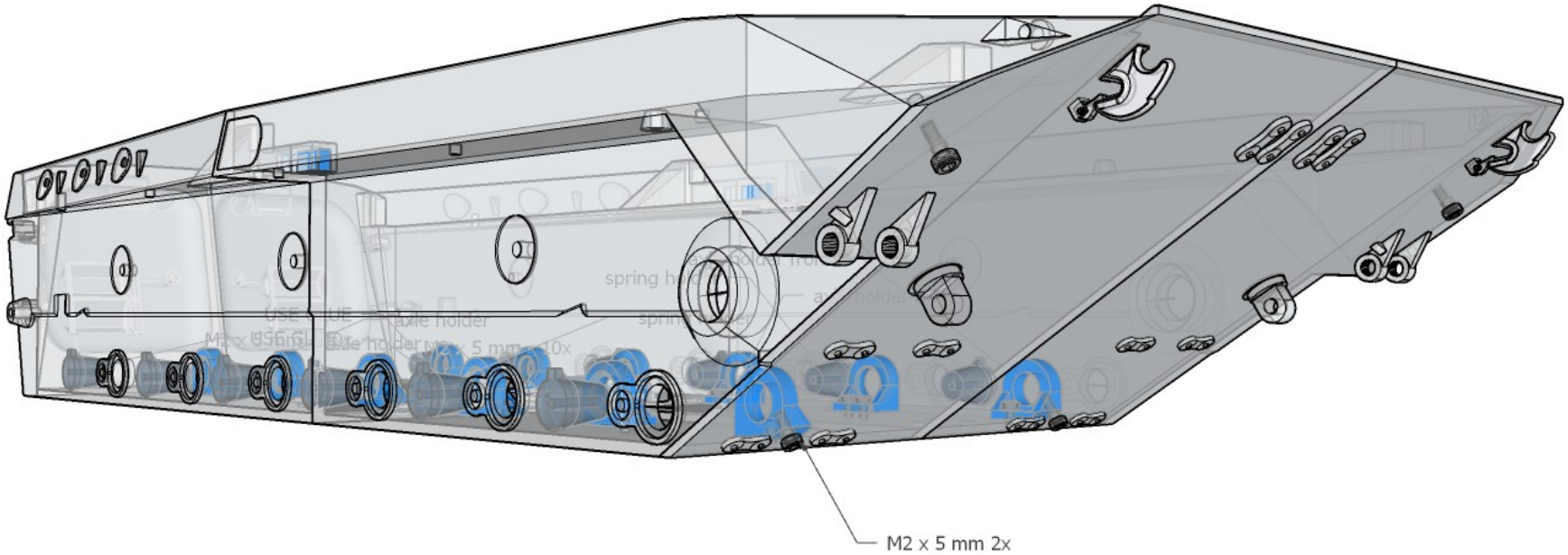

Step 6

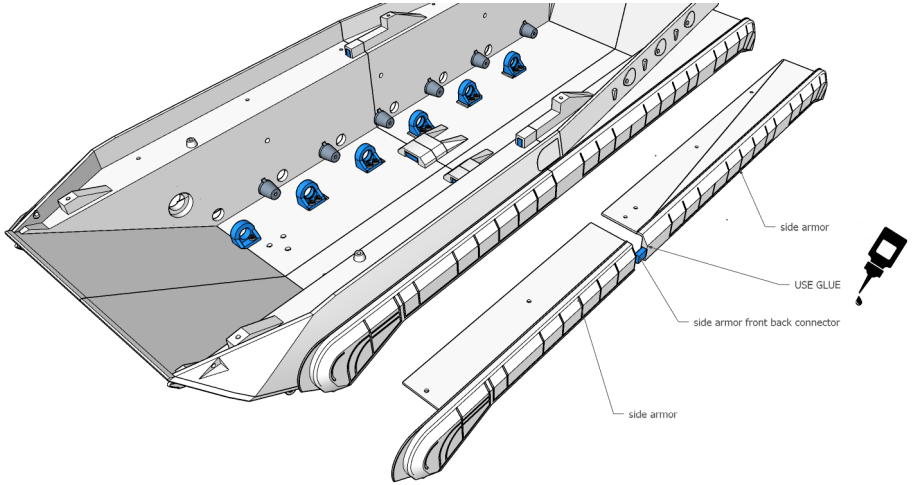
side armor
USE GLUE
side armor front back connector
side armor

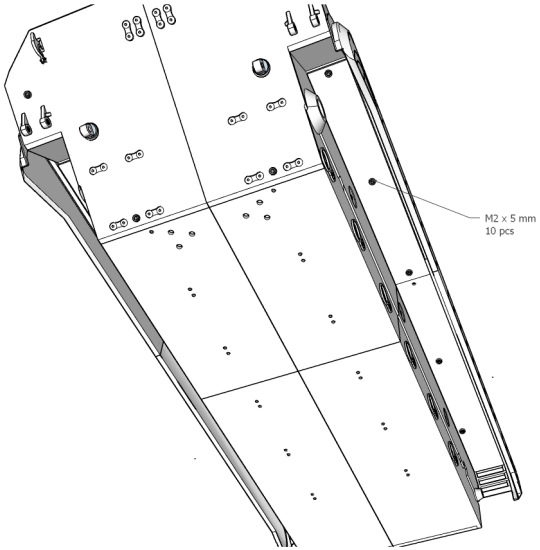
M2 x 5 mm
10 pcs

Step 7

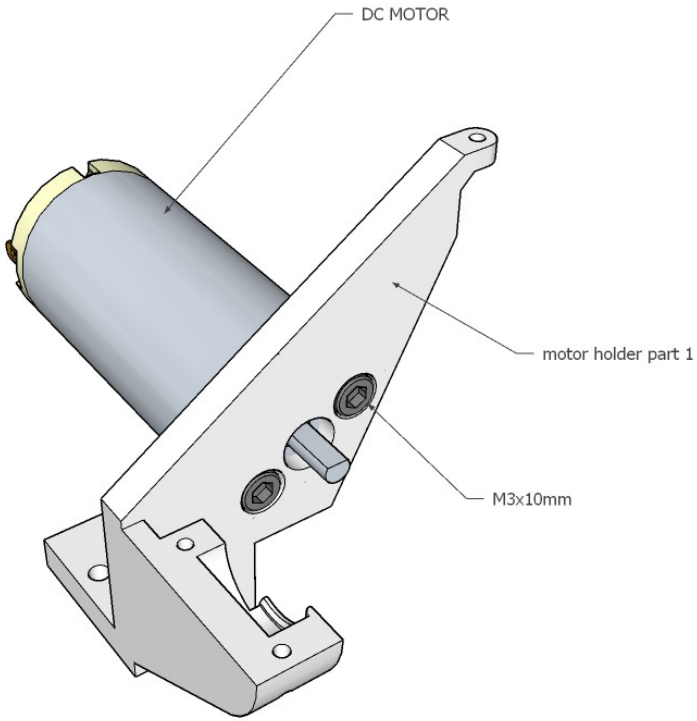

Step 8

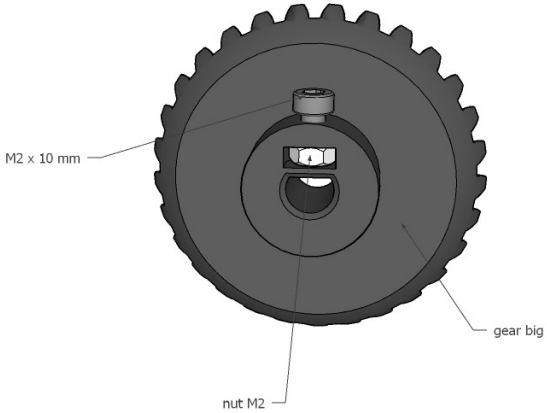

Step 9

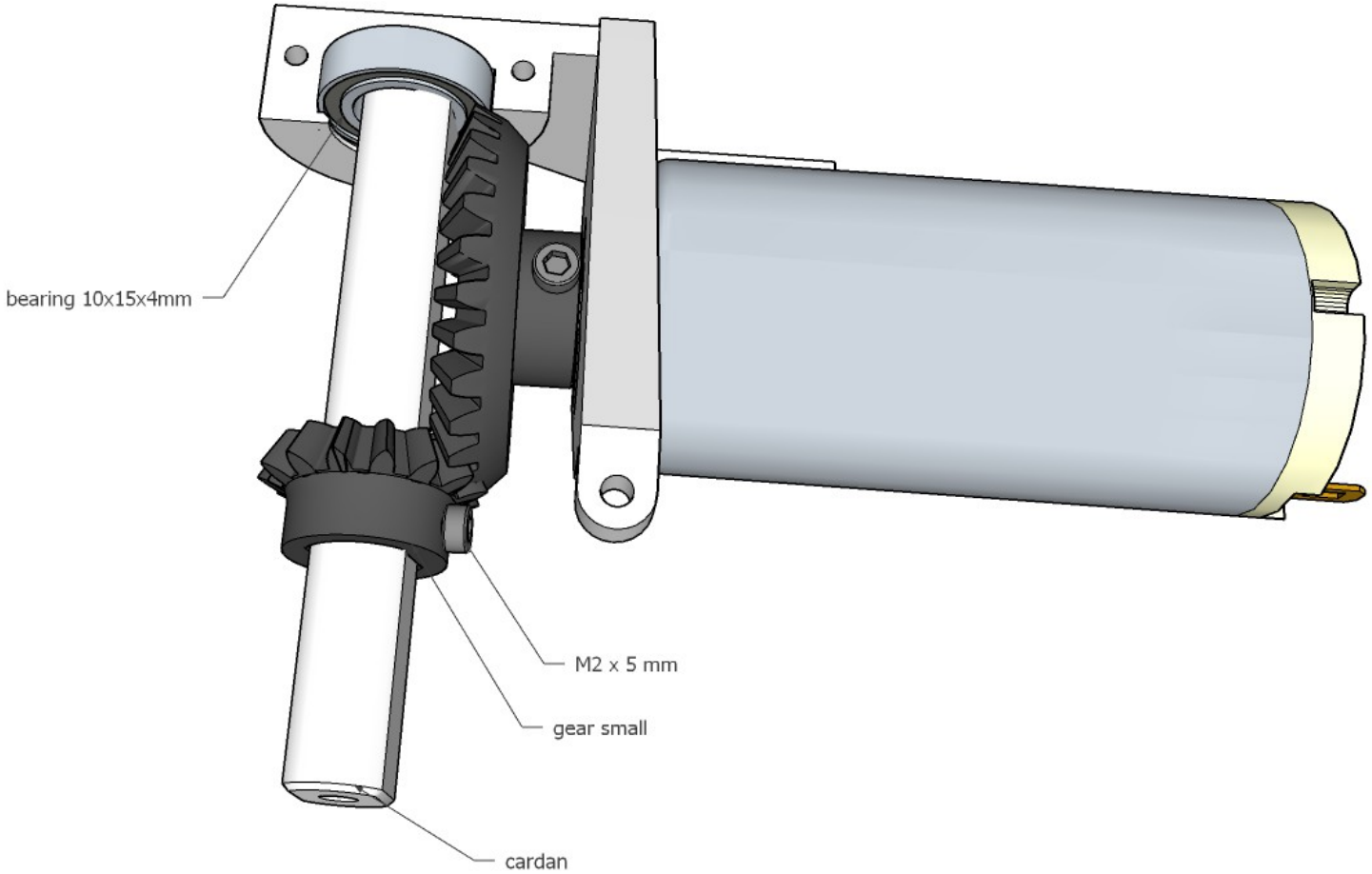

Step 10

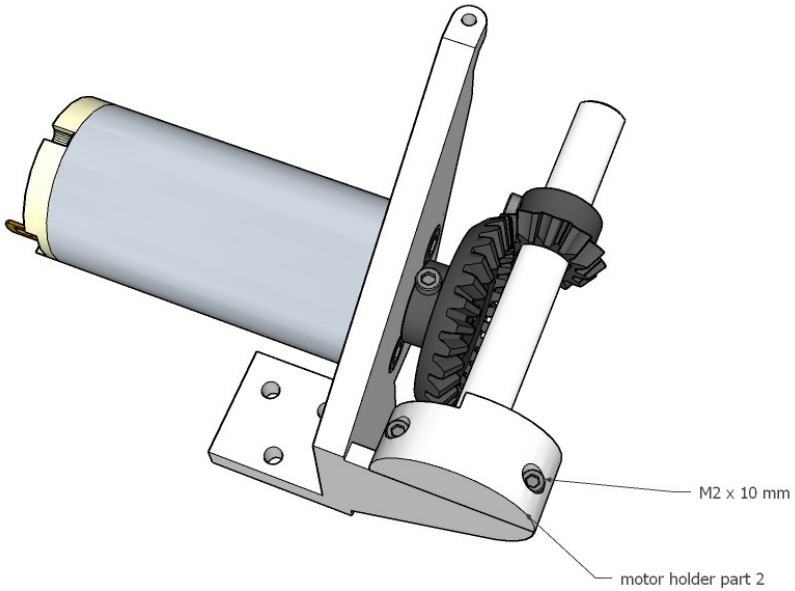

Step 11

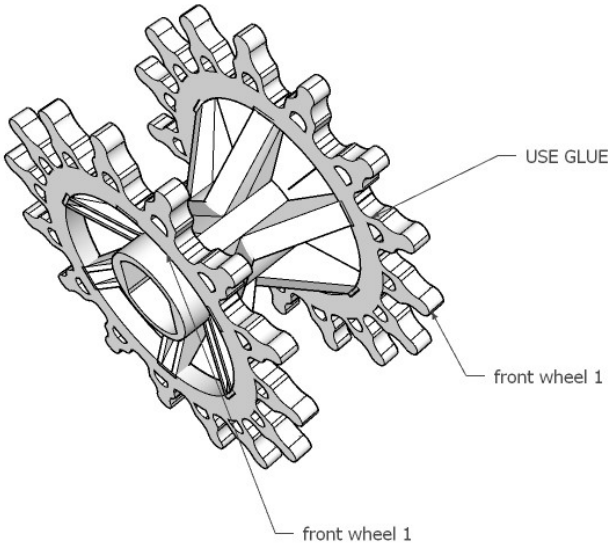

Step 12

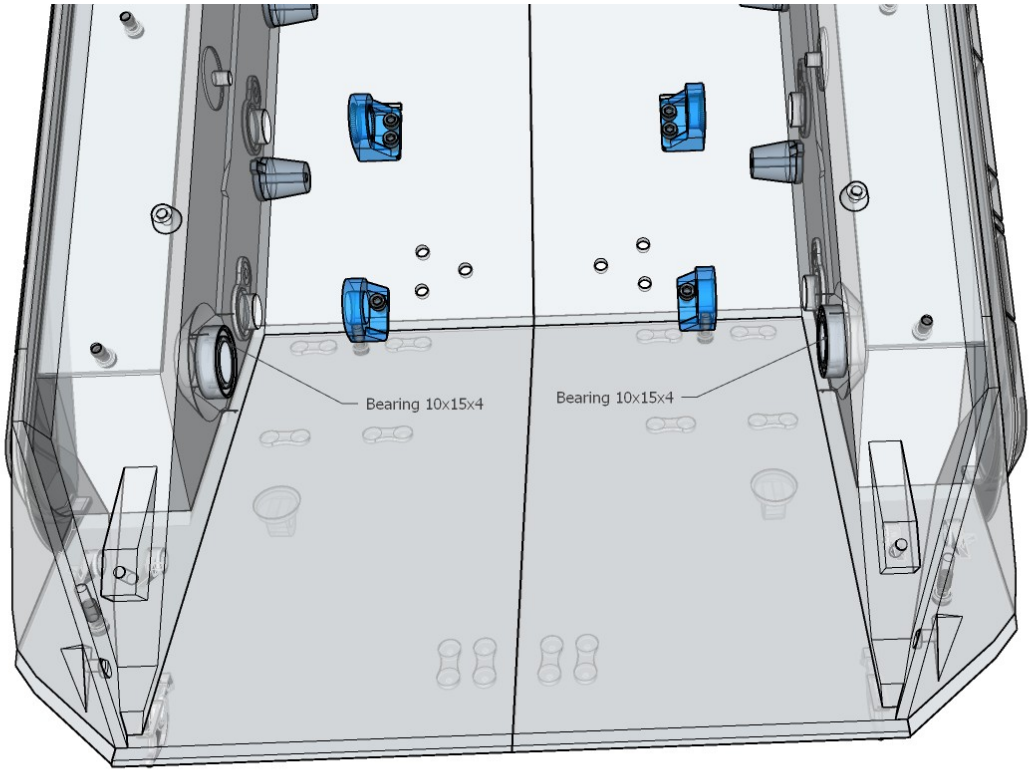

Step 13

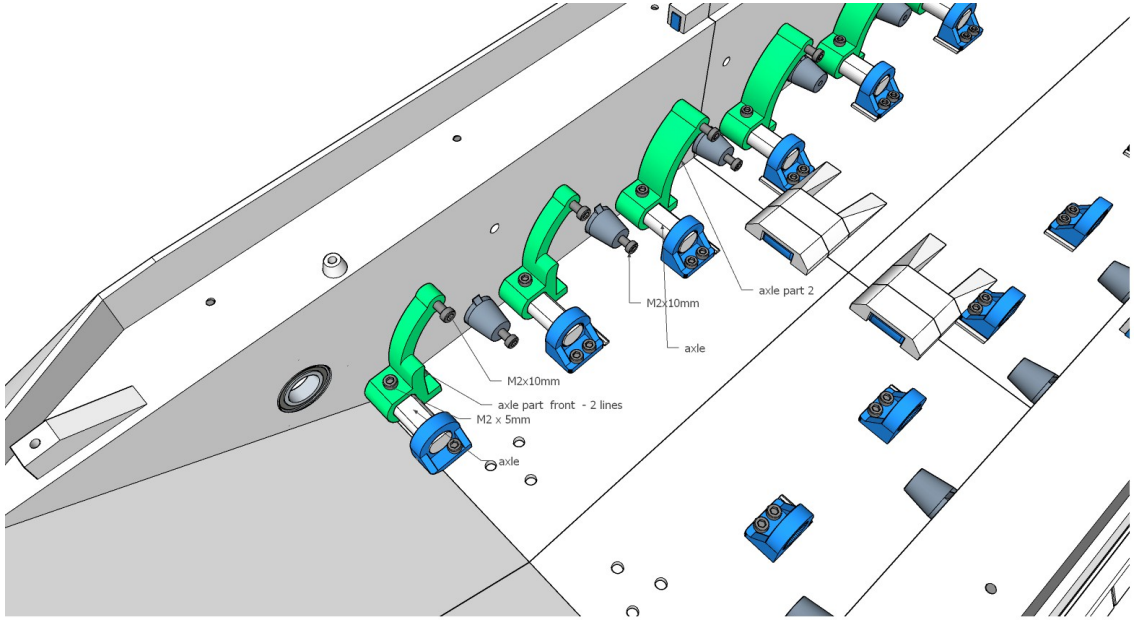
axle part 2
M2x10mm
axle
M2x10mm
axle part front - 2 lines
M2 x 5mm
axle

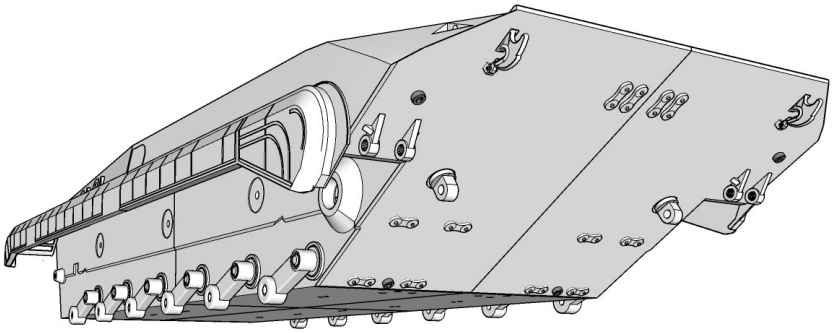

Step 14

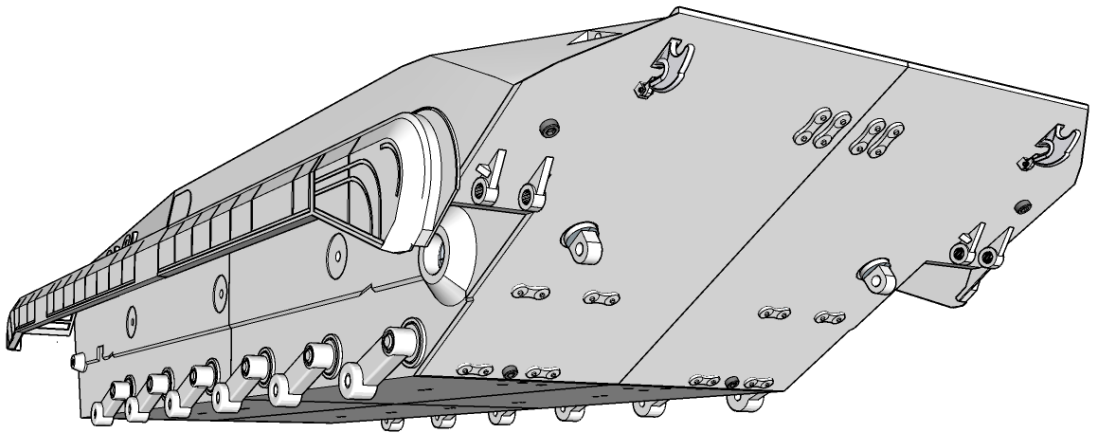

Step 15

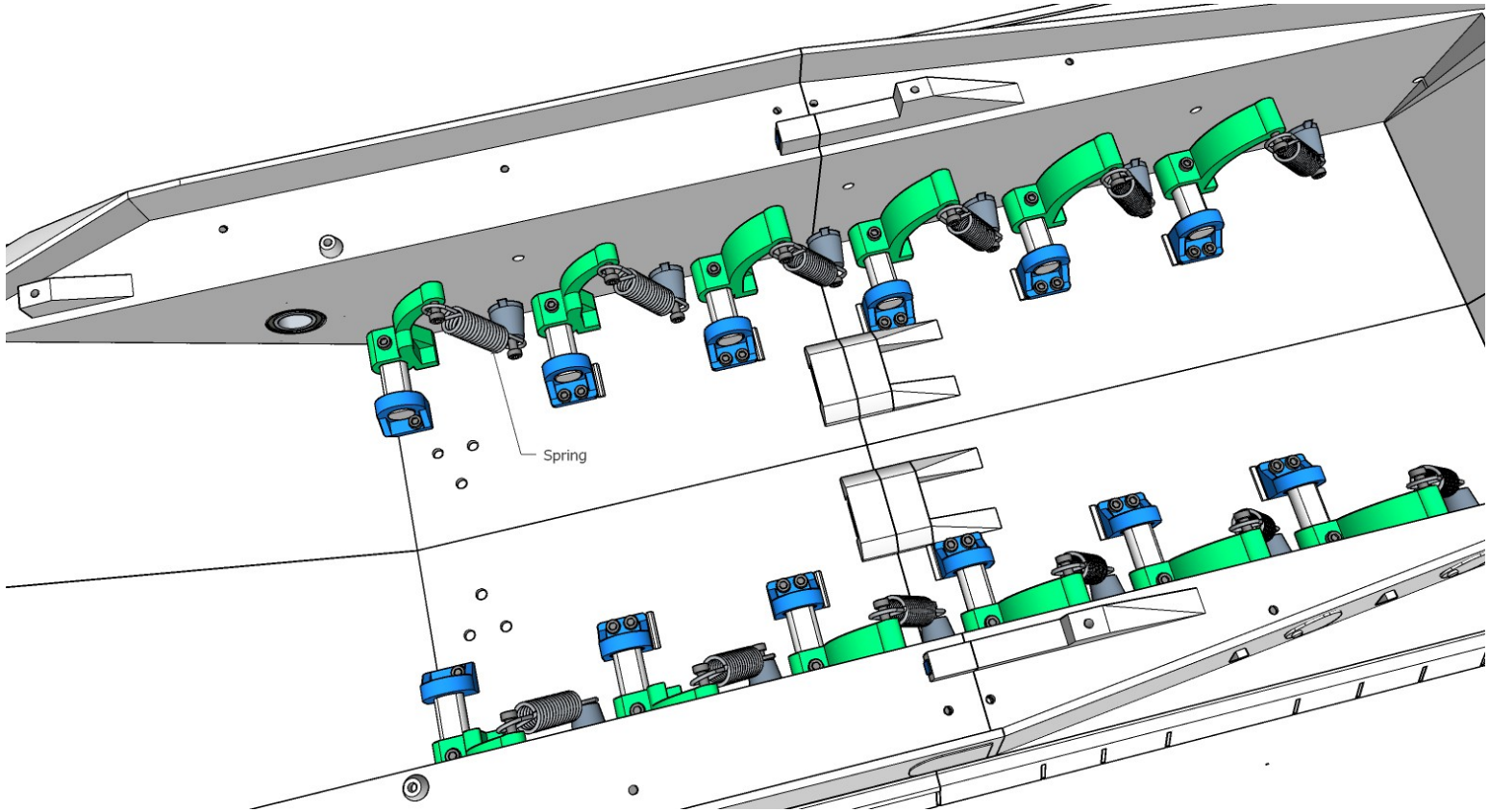

Step 16

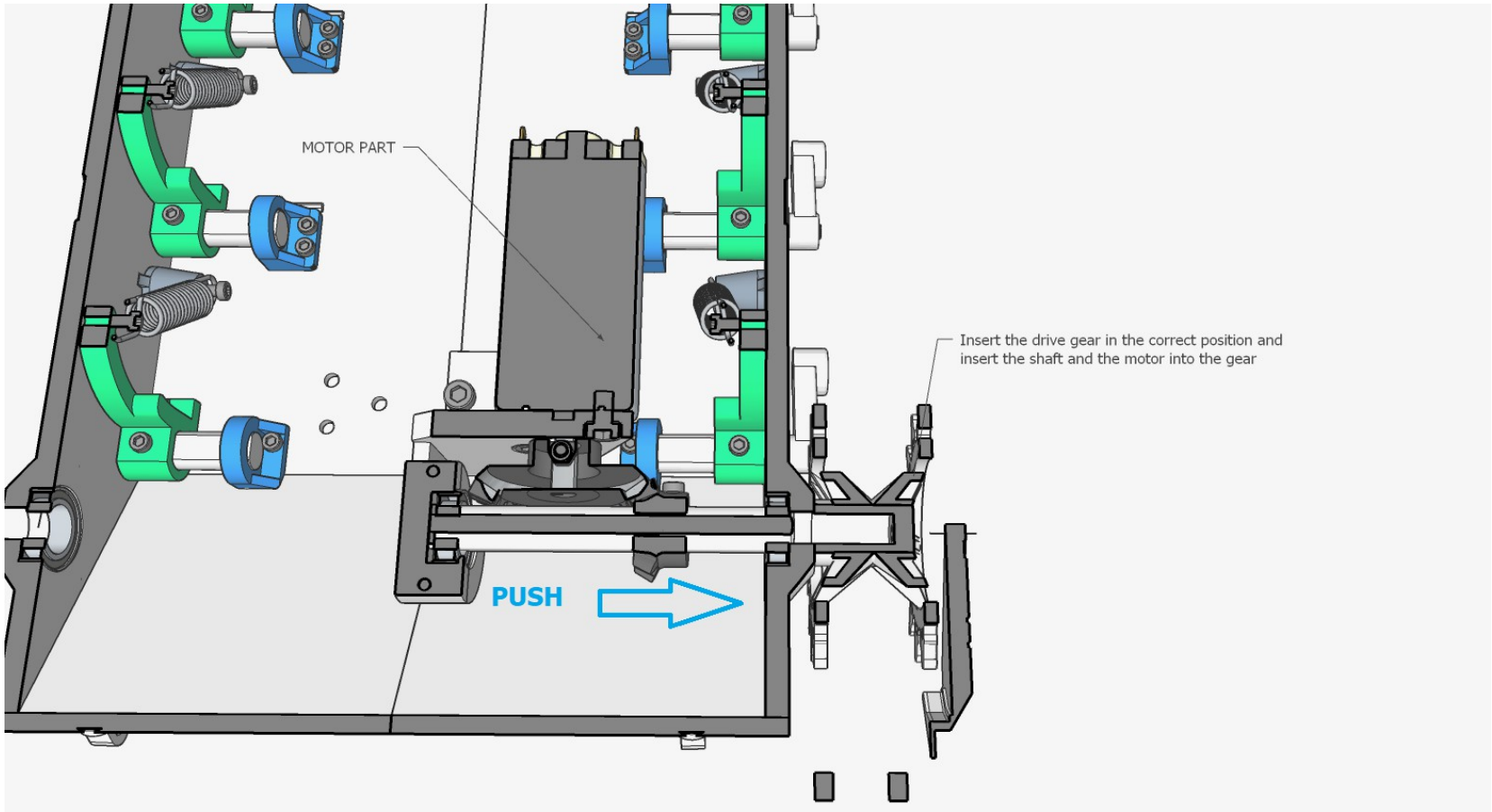
MOTOR PART
Insert the drive gear in the correct position and insert the shaft and the motor into the gear
PUSH

Step 17

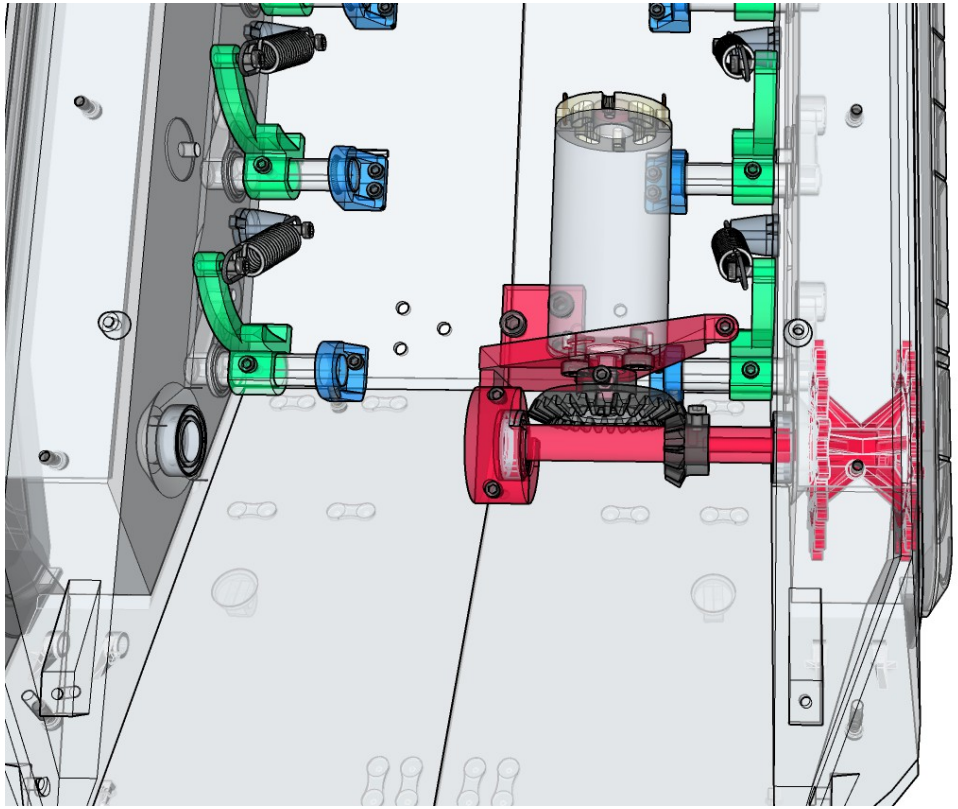

Step 18

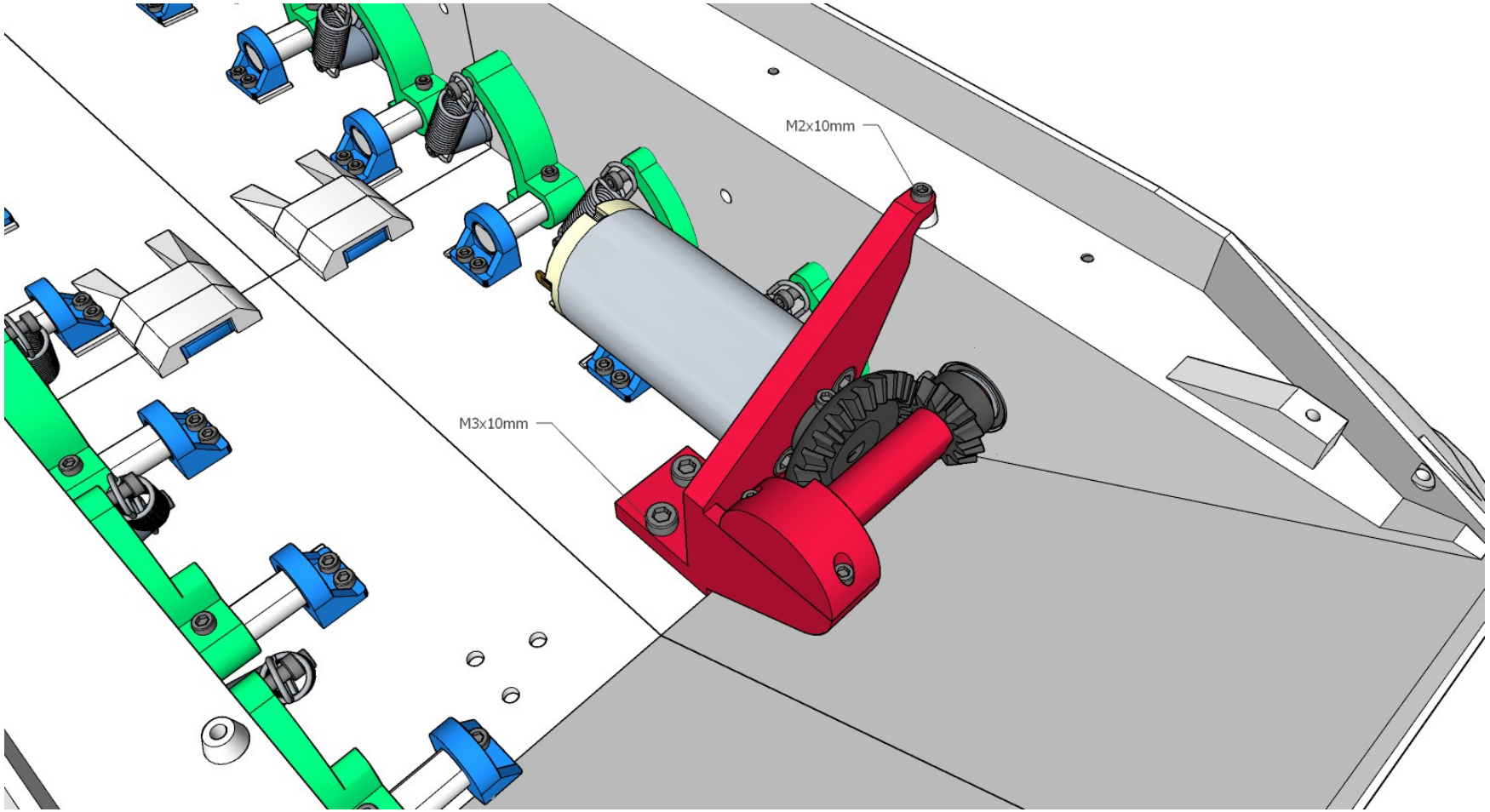

Step 19

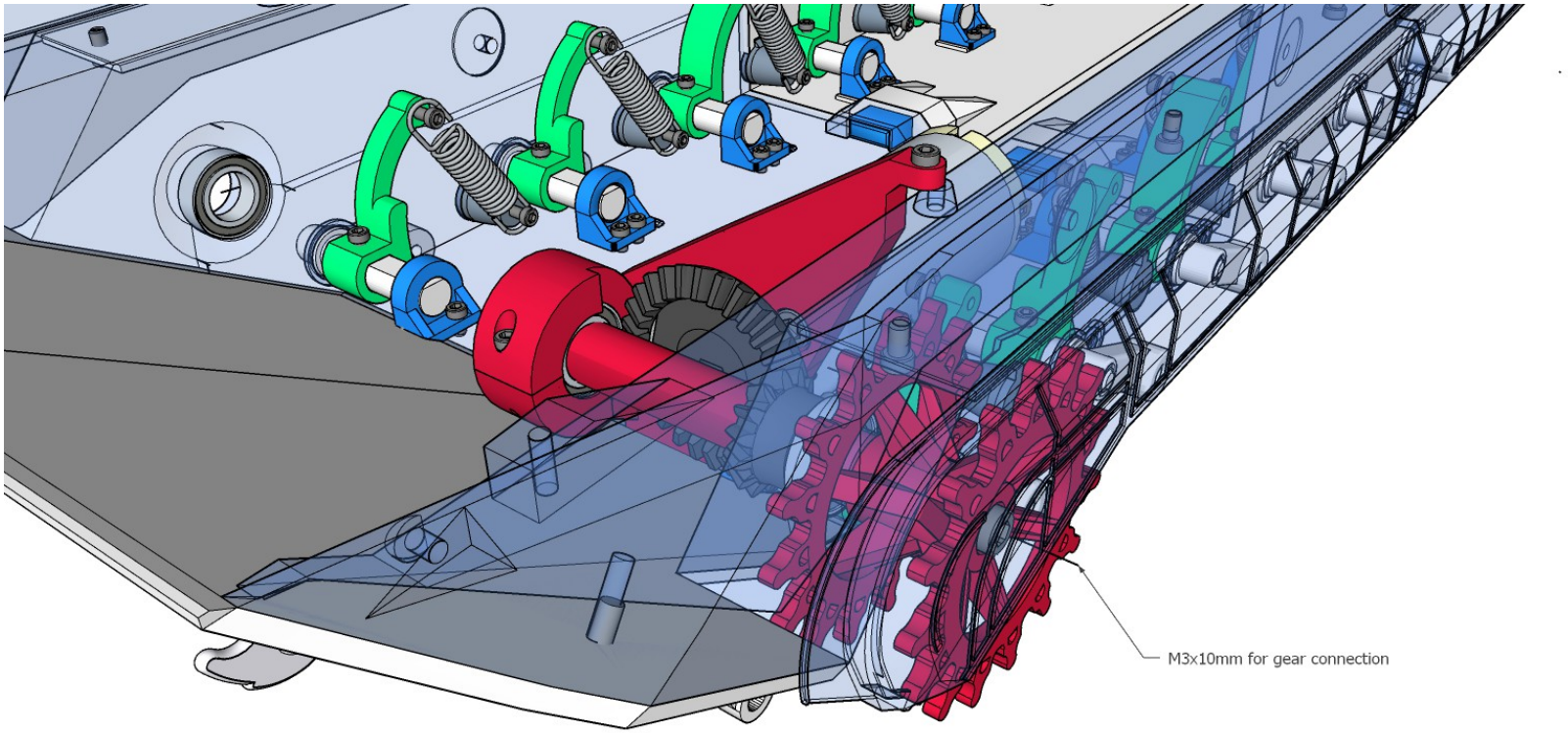

Step 20

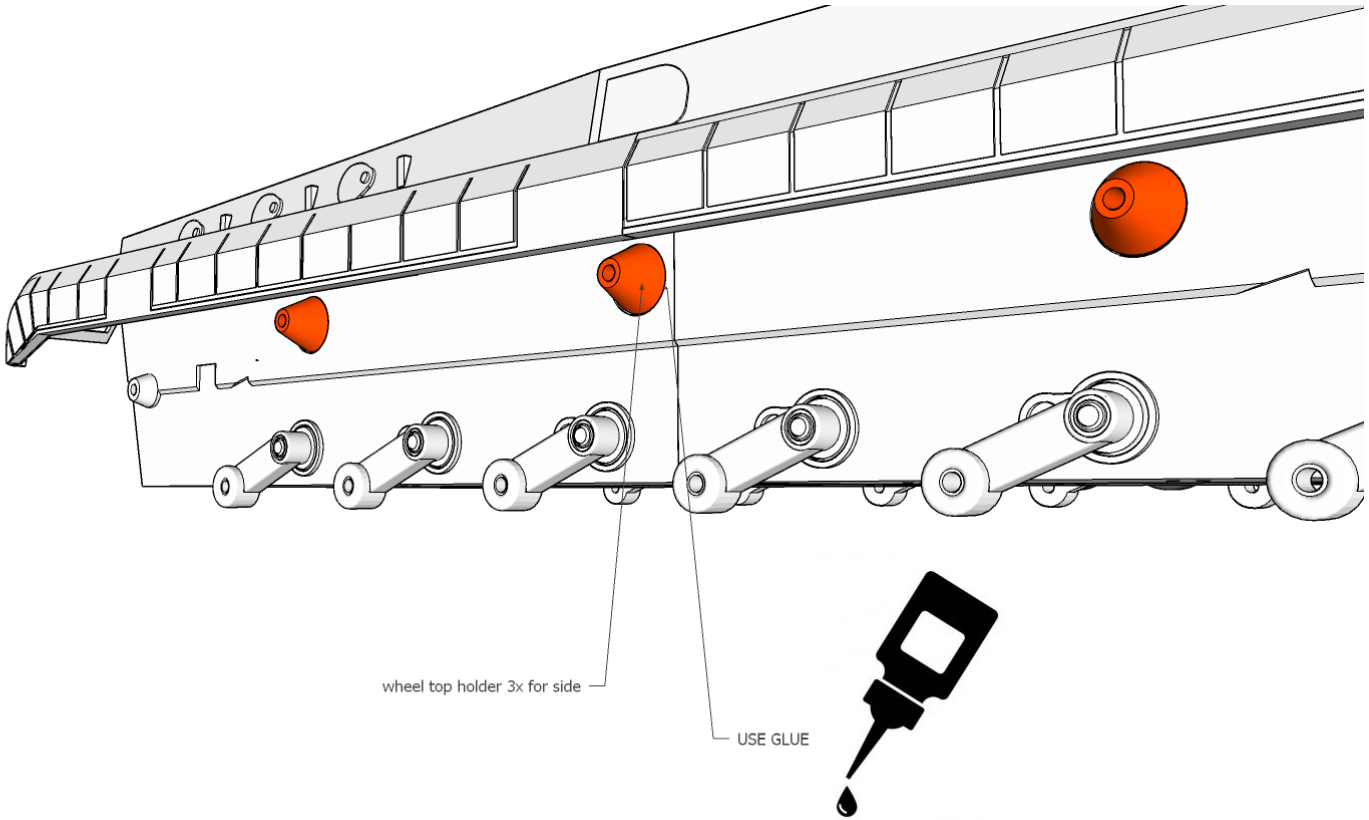

Step 21

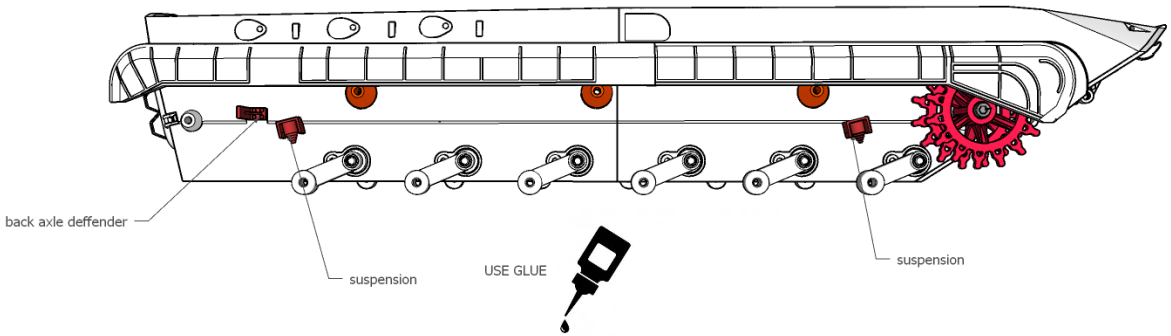

Step 22

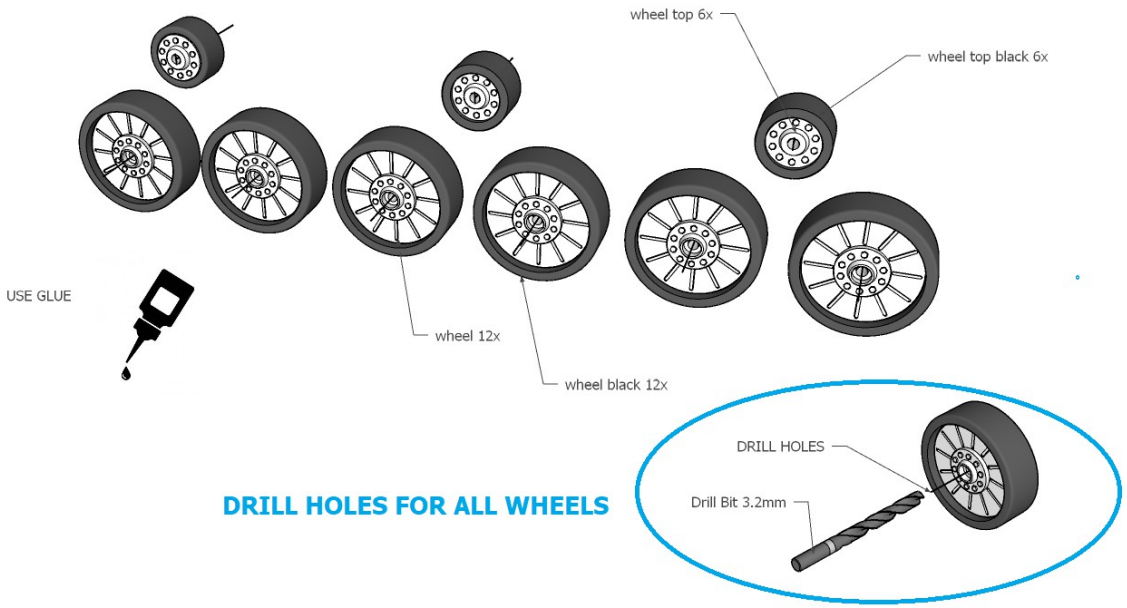

DRILL HOLES FOR ALL WHEELS

Step 23

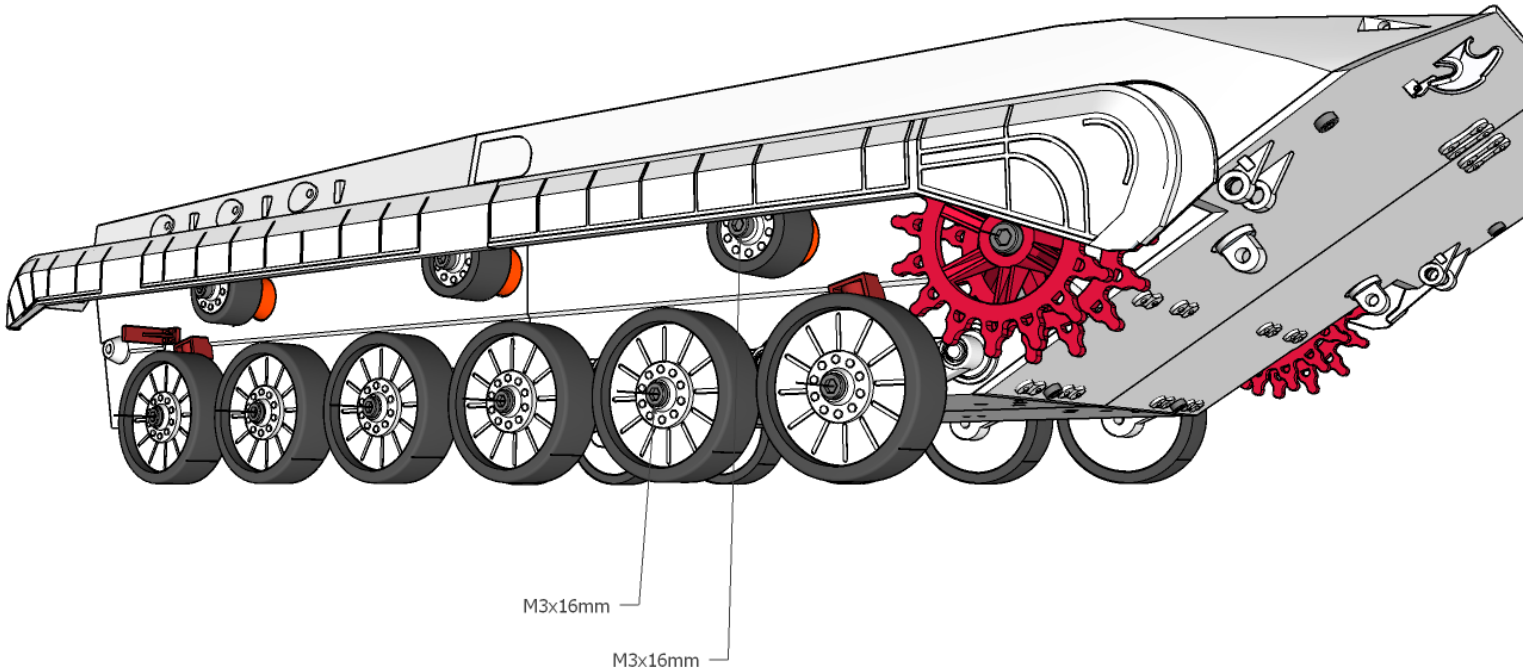

Step 24

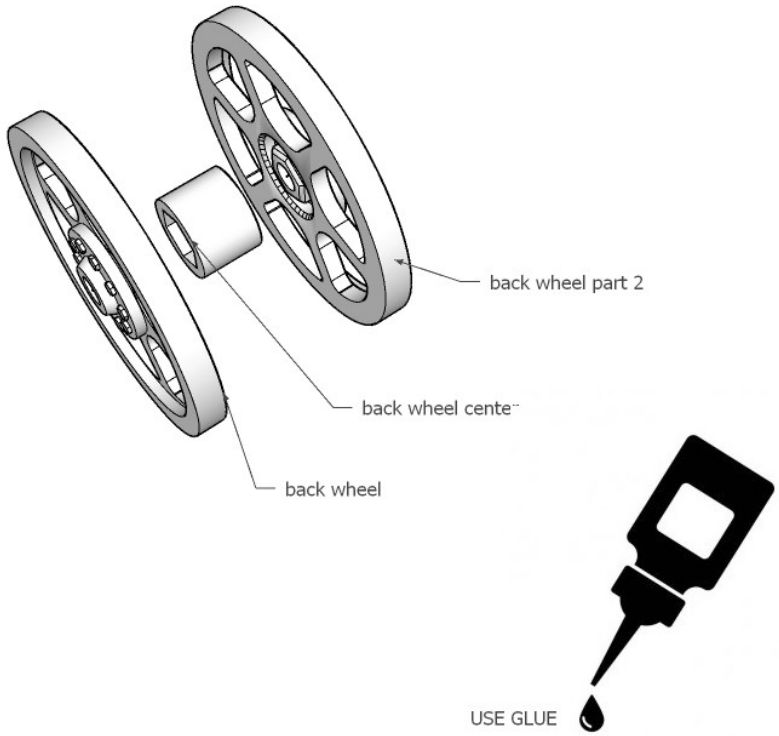

Step 25

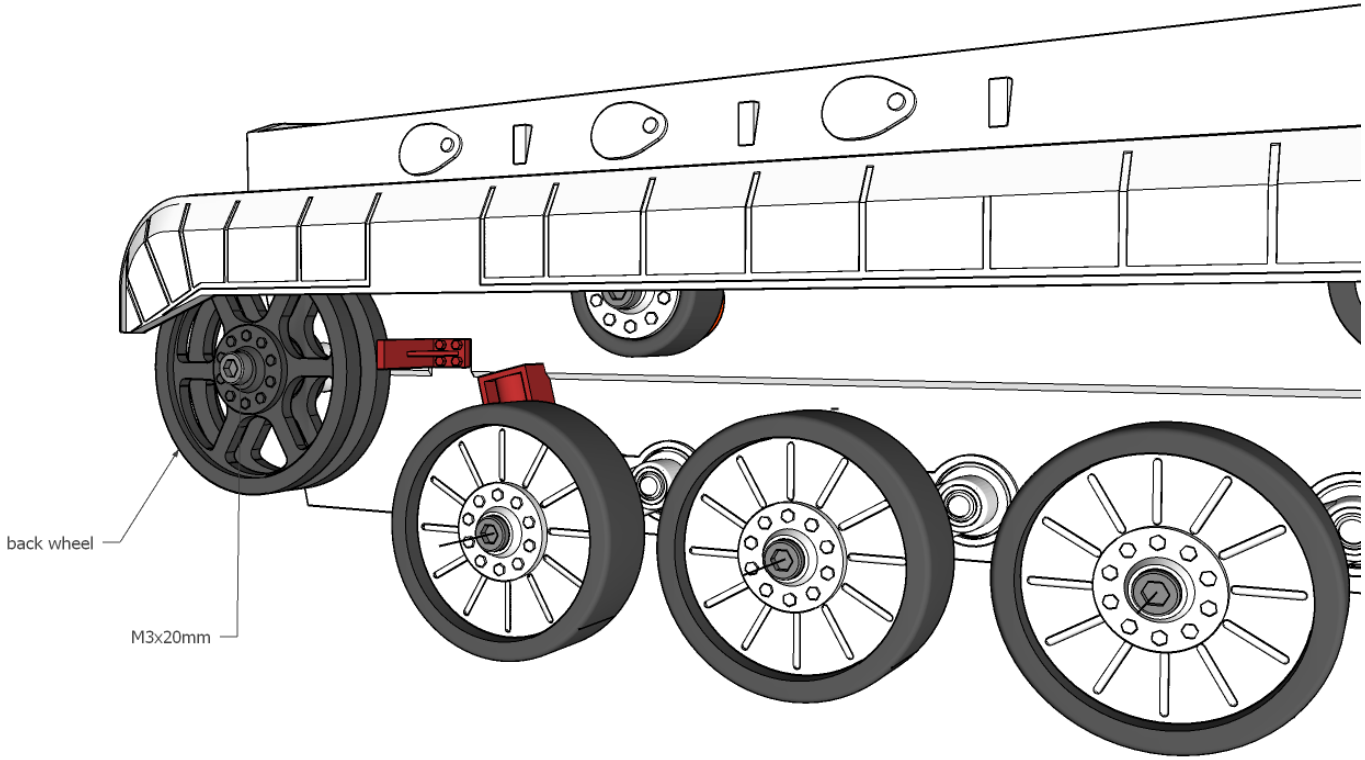

Step 26

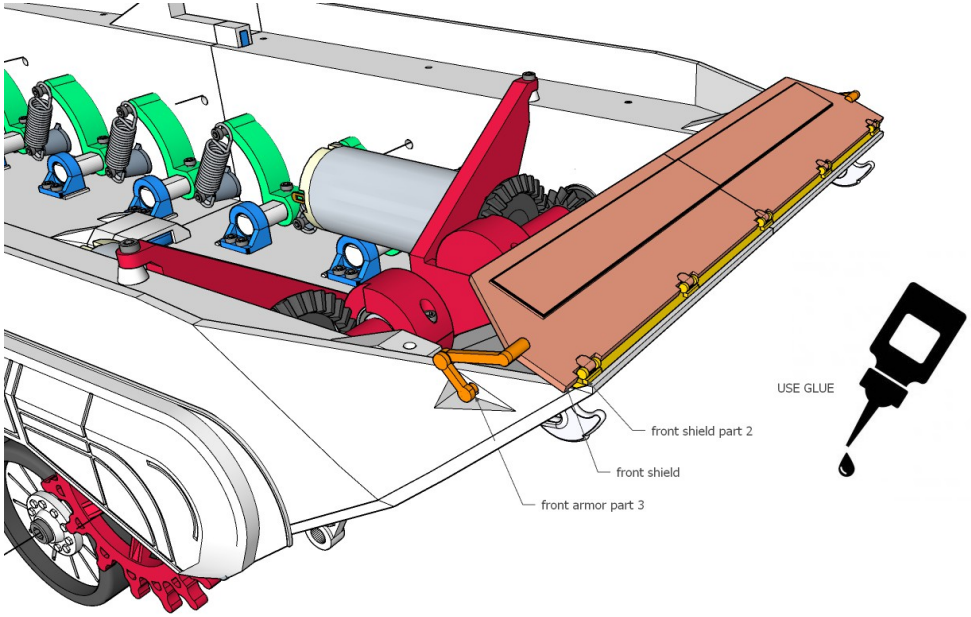

Step 27

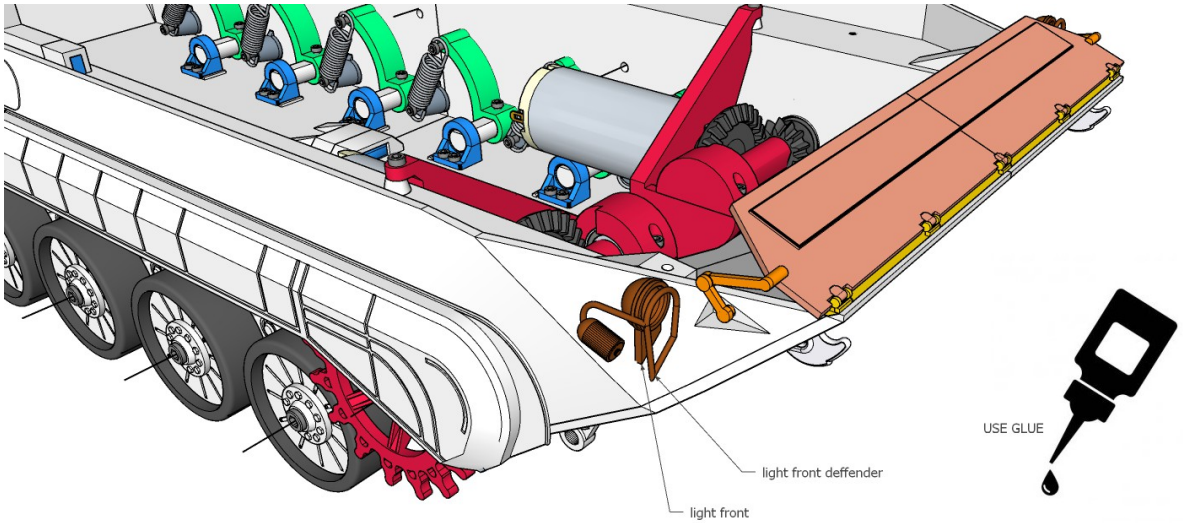

Step 28

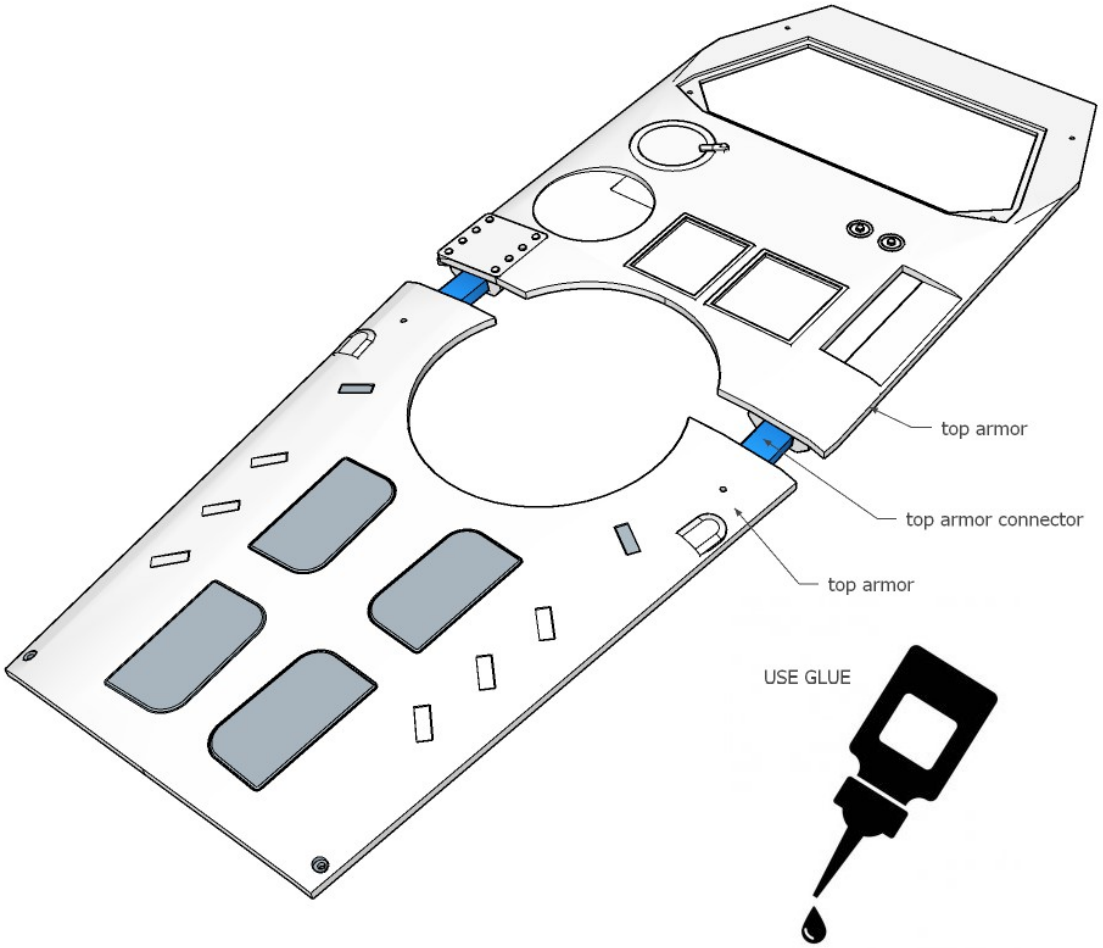

Step 29

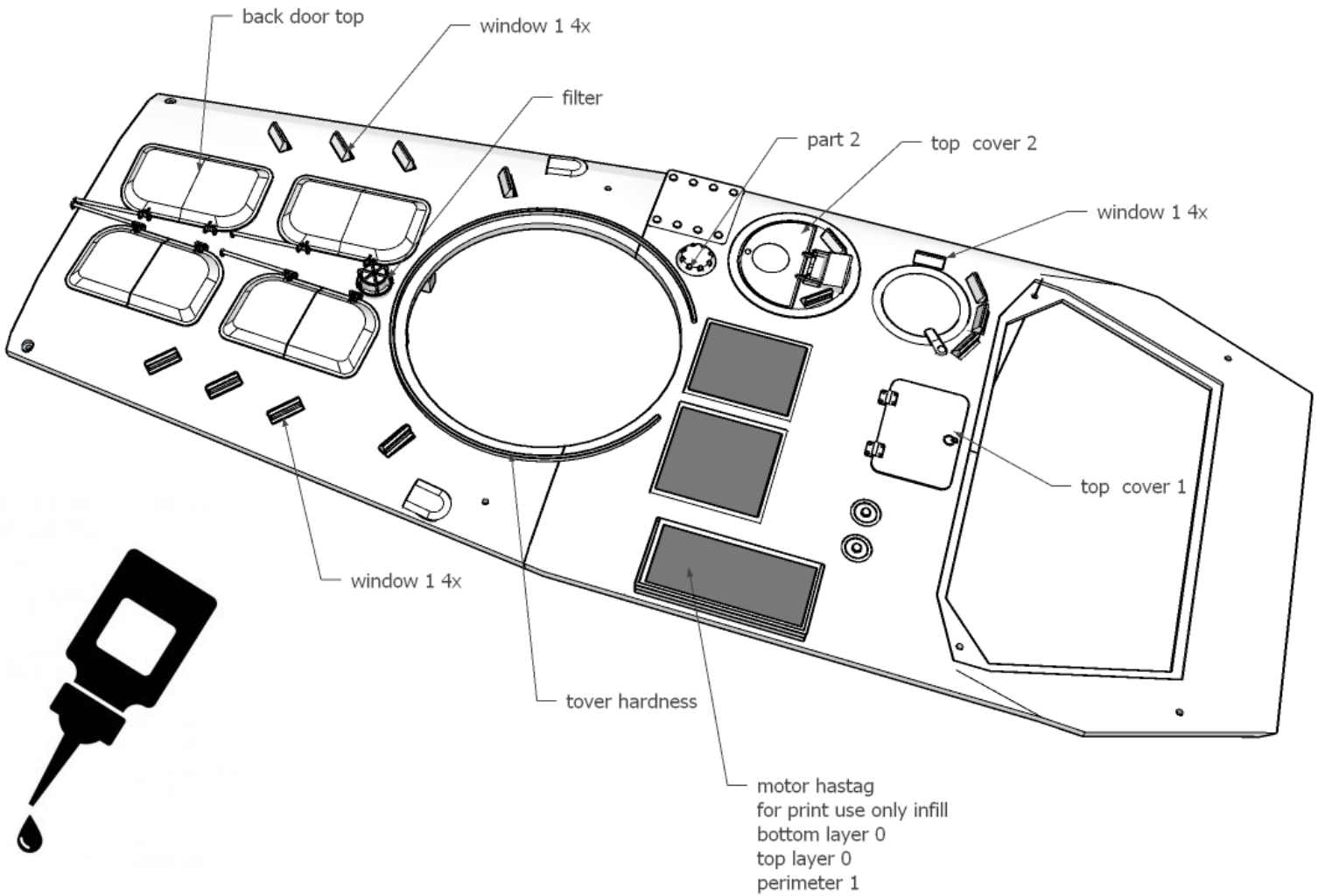
back door top
window 1 4x
filter
part 2
top cover 2
window 1 4x
top cover 1
window 1 4x
tover hardness
motor hastag
for print use only infill
bottom layer 0
top layer 0
perimeter 1

Step 30

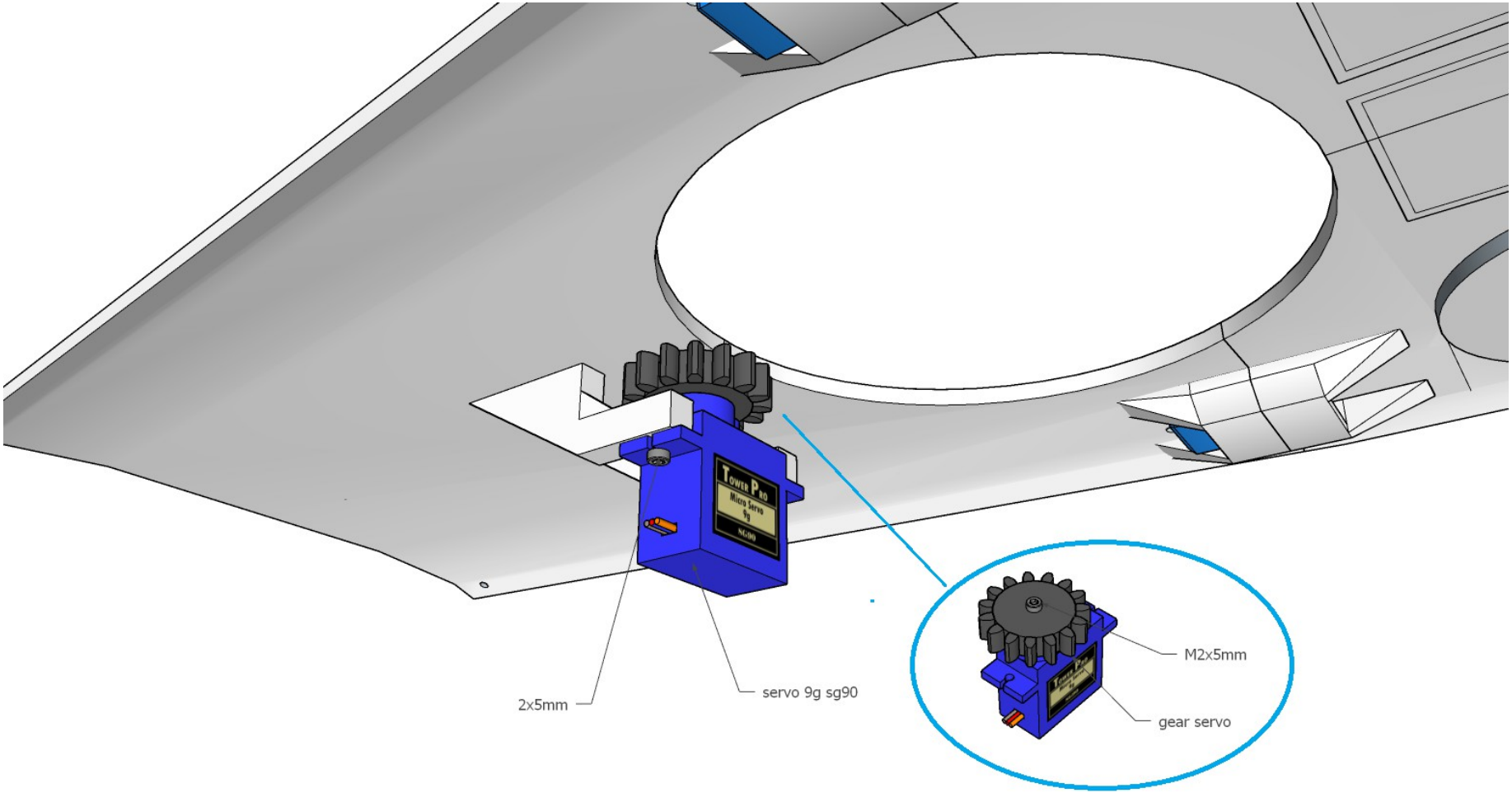

Step 31

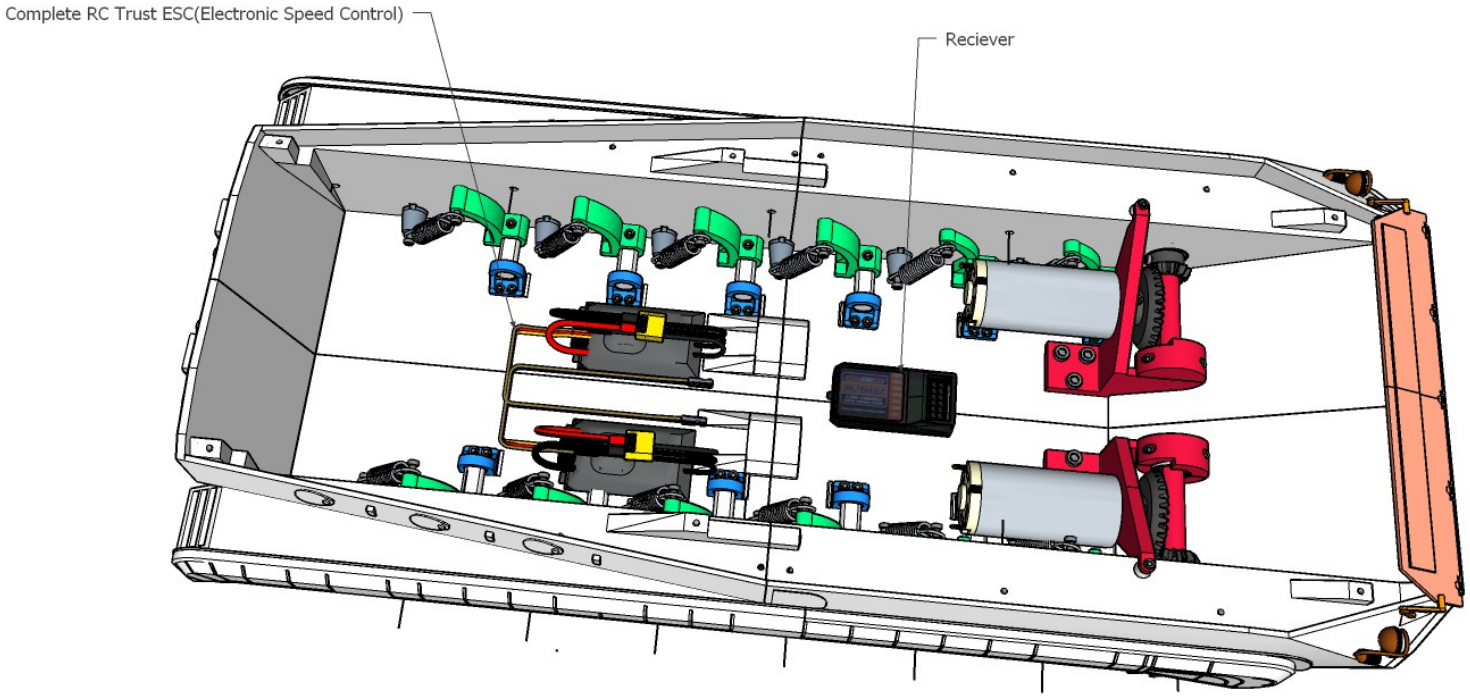

Step 32

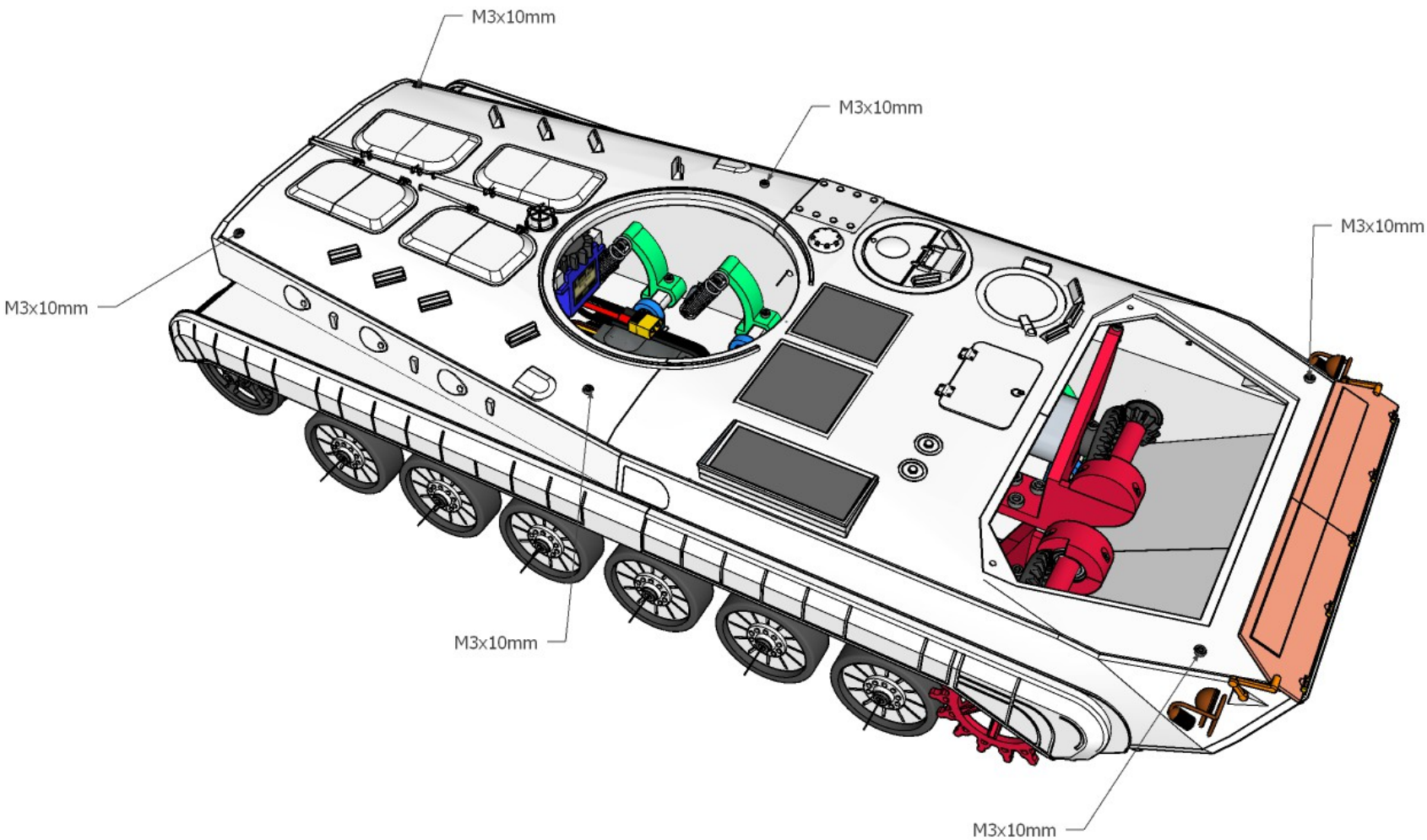

Step 33

TOWER

USE GLUE

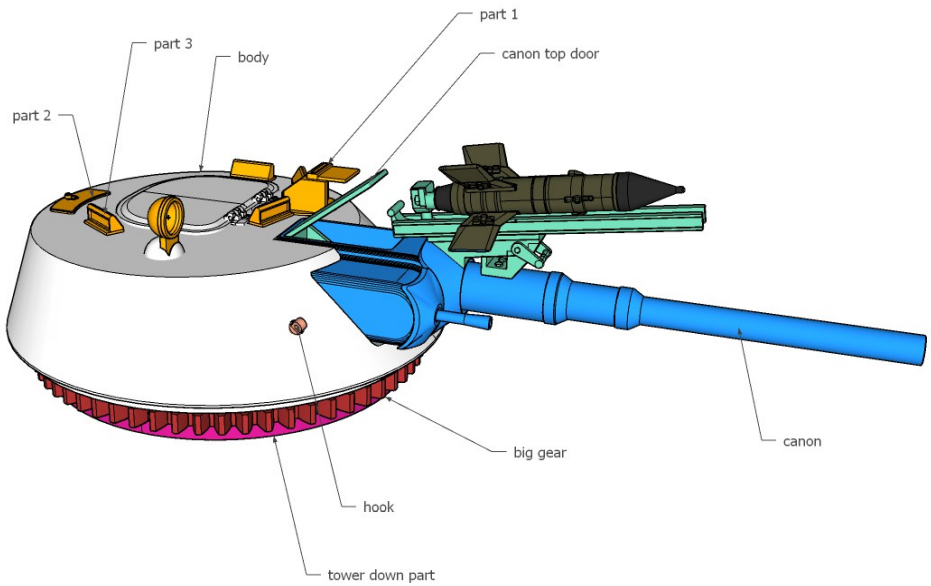

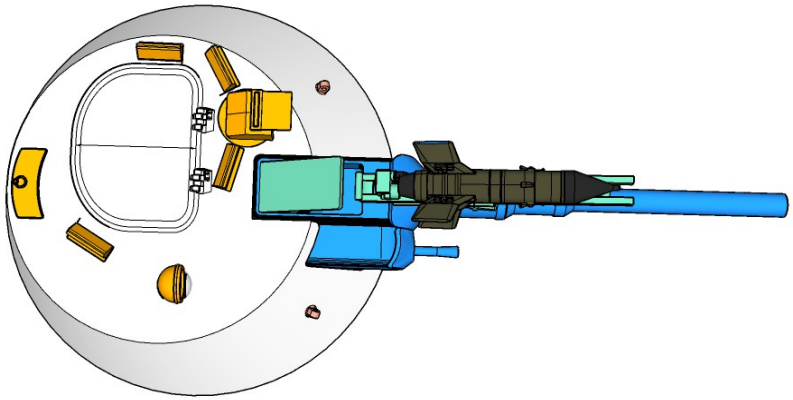

Step 34

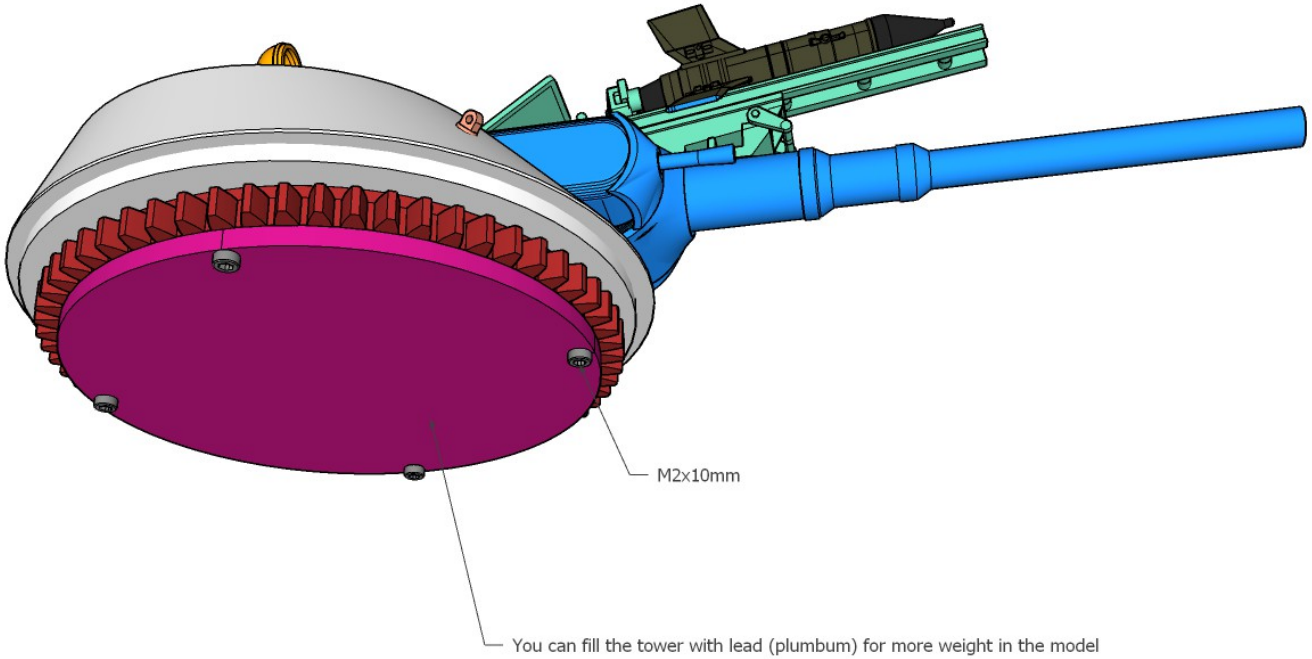
M2x10mm
You can fill the tower with lead (plumbum) for more weight in the model

Step 35

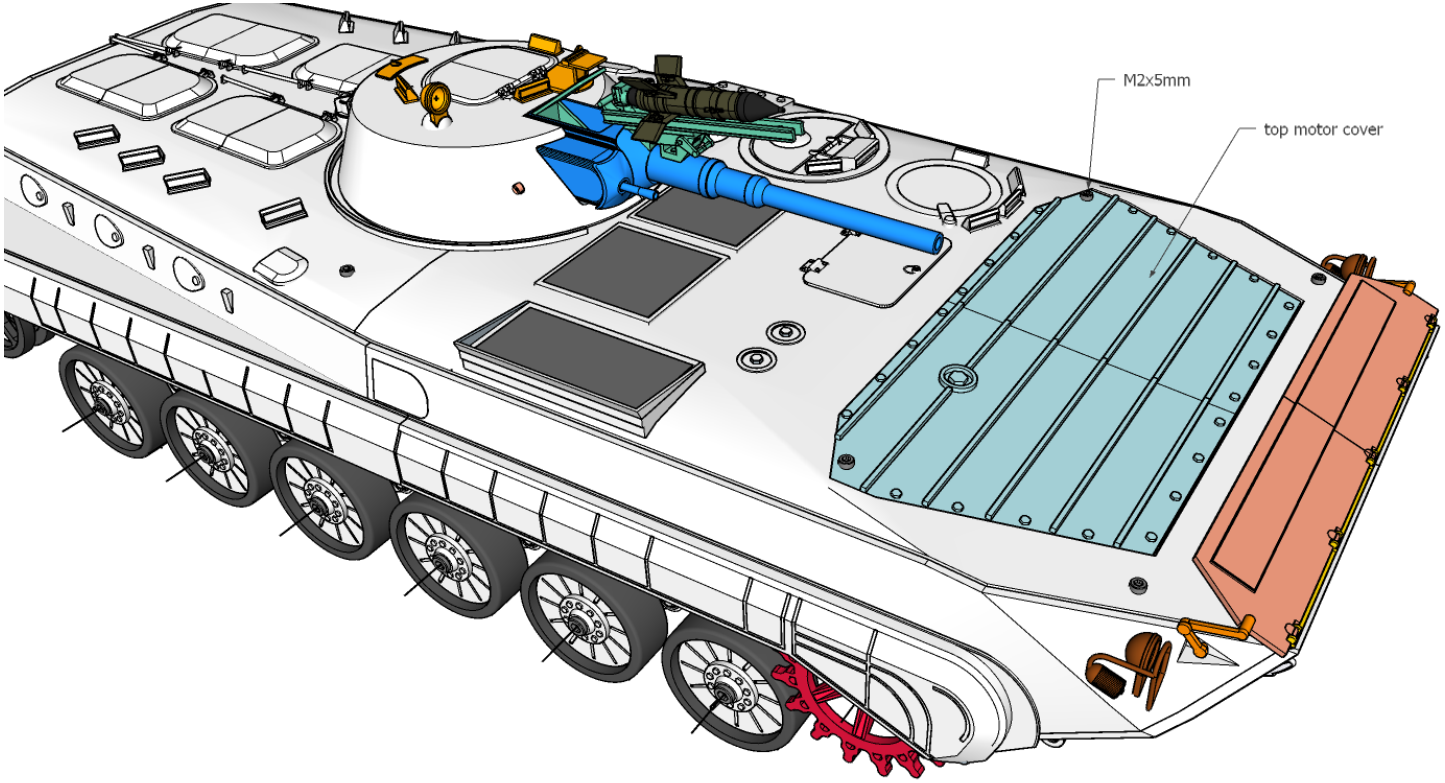

Step 36

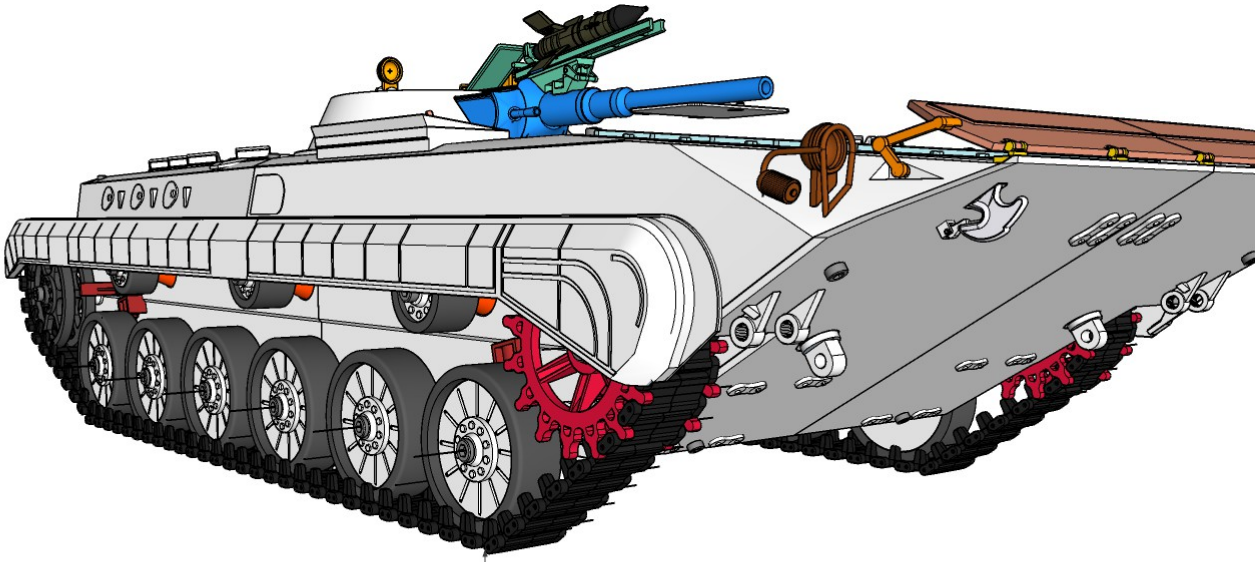

print 3x track line v2 for side , connect it with steel rod (dia 1,5mm)
and 1x Track v 2 8