BTR 82 1/16 SCALE

A few words about the building .....
I use PLA (Plasty Mladeč)

I recommend a layer of 0.2 mm, just 40% fill.
For axle use 5 perimeters

You will need:

- contains 24 bearings 10x15x4
- screws M3 x 10 mm - 20 pcs
- screws M3 x 16 mm – 20pcs
- screws M3 x 25 mm – 5pcs
- screws M2 x 5 mm – 50pcs
- screws M2 x 10 mm – 100pcs
- screws M2 x 8 mm – 10pcs
- Nut M3 - 6pcs
- Servo 360° https://www.laskakit.cz/plastove-micro-servo-sg90-9g--kontinualni/
- ENGINE : https://velkoobchod.conrad.sk/modelcraft-rb350018-2a723r-vysoce-vykonny-motor-12-v-18-1.k233131
- Batery for RC model https://www.conrad.sk/p/droneart-akupack-li-pol-111-v-1300-mah-pocet-clankov-3-75-c-softcase-xt60-1784867
- Regulator for engine

  https://www.conrad.sk/p/reely-40a-auto-brushed-zatazitelnost-max-180-a-limit-motora-otacky-12-1600323
- CONTROL:
  https://www.conrad.sk/p/reely-ht-5-rucne-dialkove-ovladanie-24-ghz-kanalov-5-vr-prijimaca-1414497
- Steel rod dia 1,6mm -13mm – 20pcs
  Steel rod dia 1 mm – 5mm – 5pcs
  8mm - 3pcs
  Steel rod dia 0,65 mm – 4mm – 10pcs

- SPRINGS - coiling of springs no more than 1 cm - the spring should withstand a pull of 1-2 kg
  https://www.motora.sk/naradie/spotrebny-material-informacie/spotrebny-material-na-opravu-a-udrzbu-brzd/sada-taznych-a-tlacnych-pruzin-200-ks-1940105.htm

Step 1

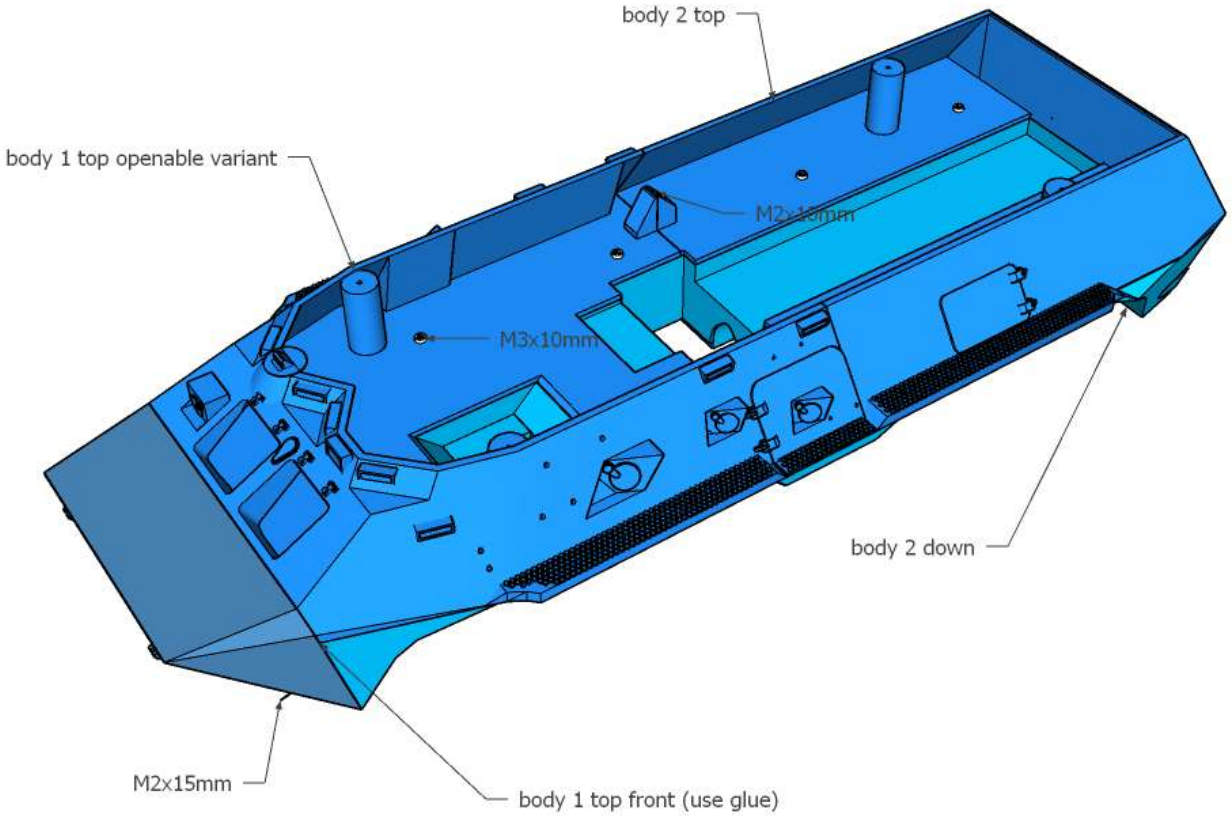
body 2 top
body 1 top openable variant
M2x10mm
M3x10mm
body 2 down
M2x15mm
body 1 top front (use glue)

Step 2

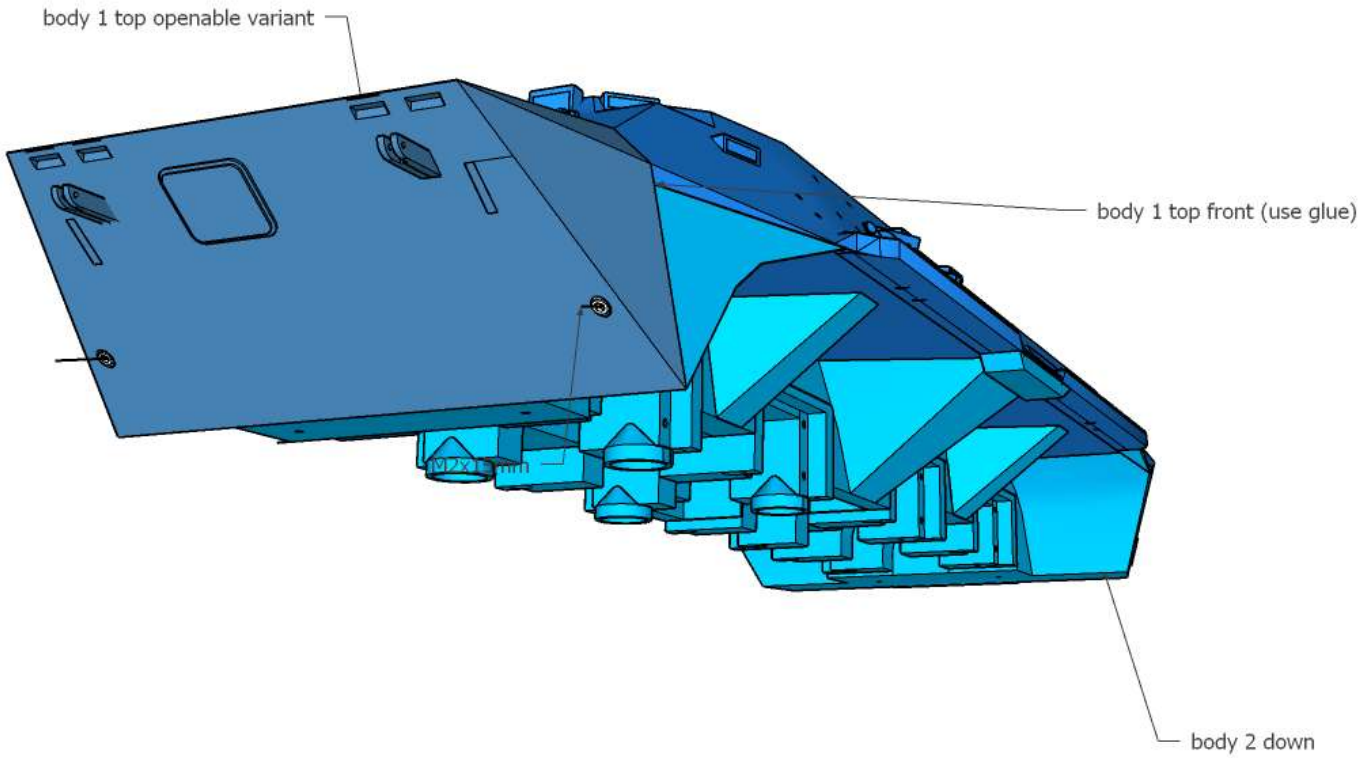
body 1 top openable variant
body 1 top front (use glue)
body 2 down

Step 3

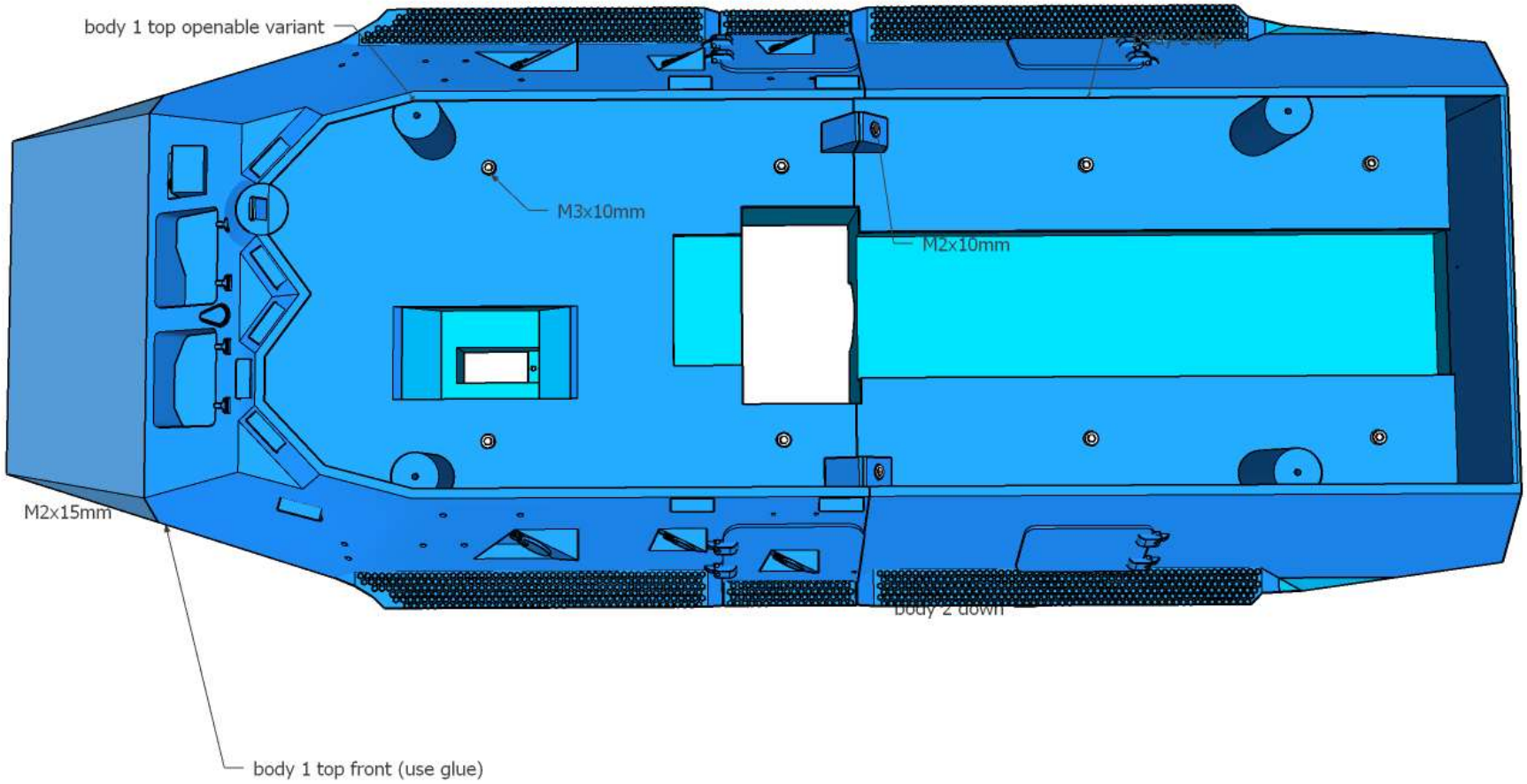
body 1 top openable variant
M3x10mm
M2x10mm
M2x15mm
body 2 down
body 1 top front (use glue)

Step 4

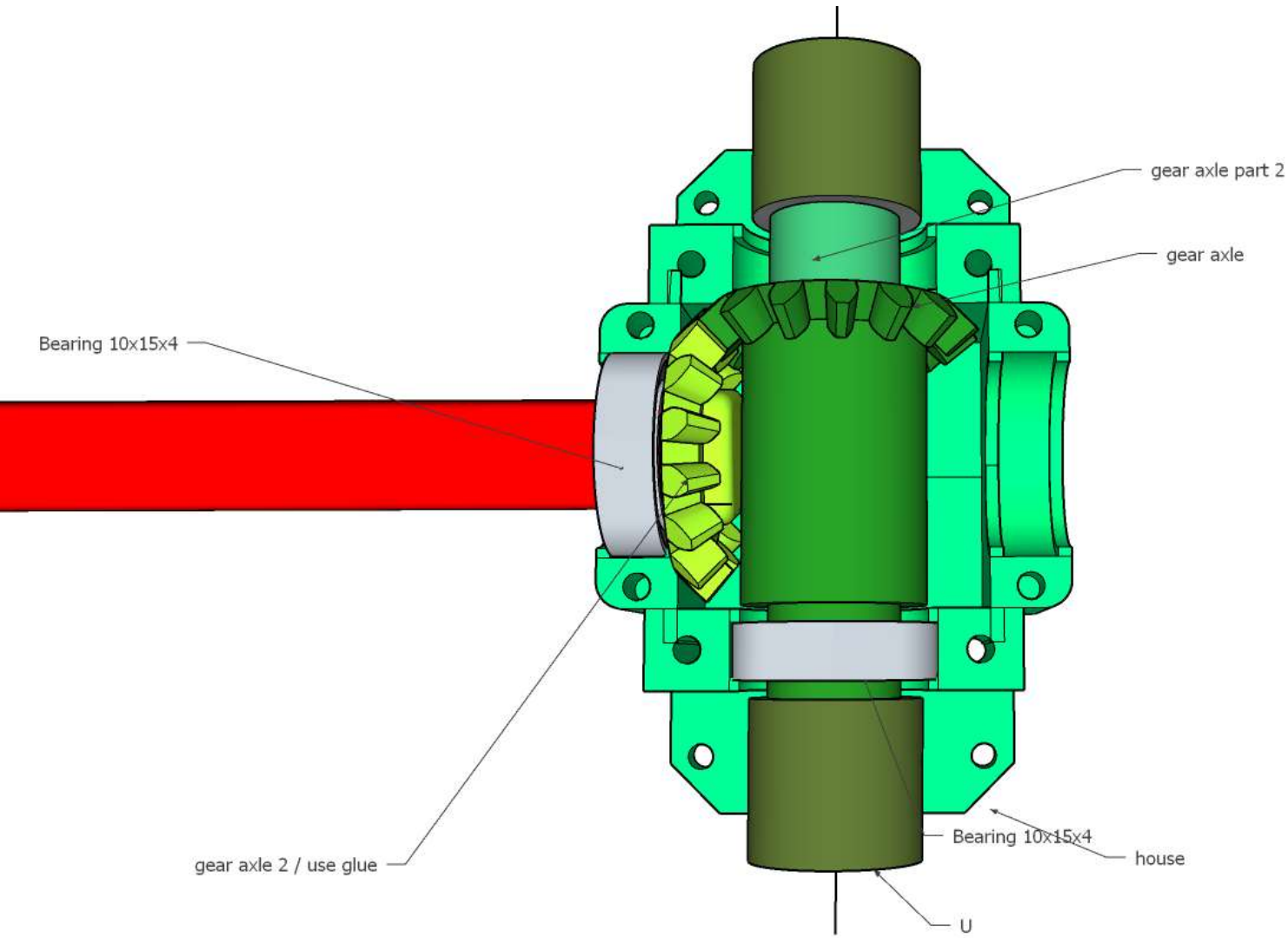
gear axle part 2
gear axle
Bearing 10x15x4
gear axle 2 / use glue
Bearing 10x15x4
house
U

Step 5

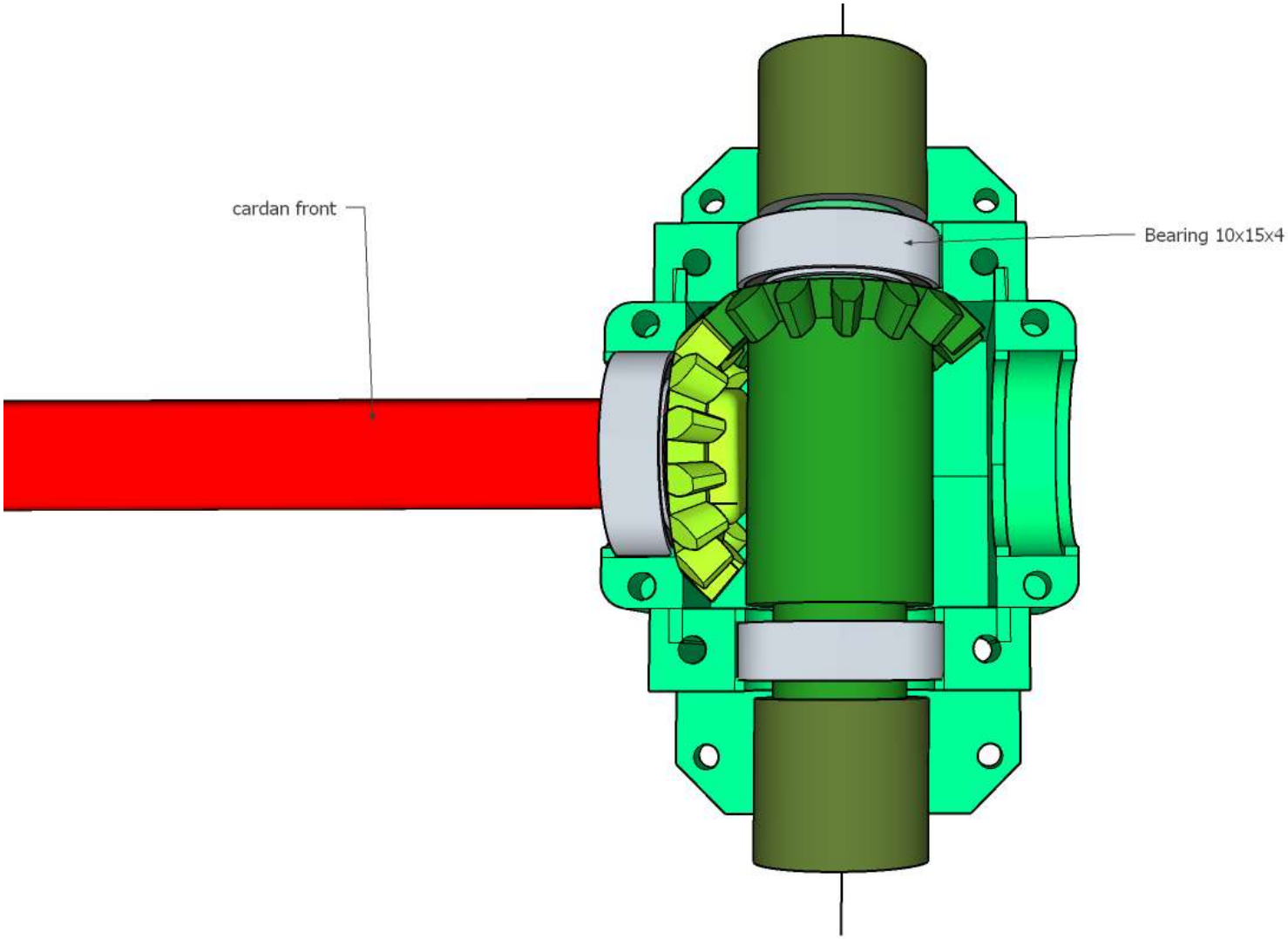

Step 6

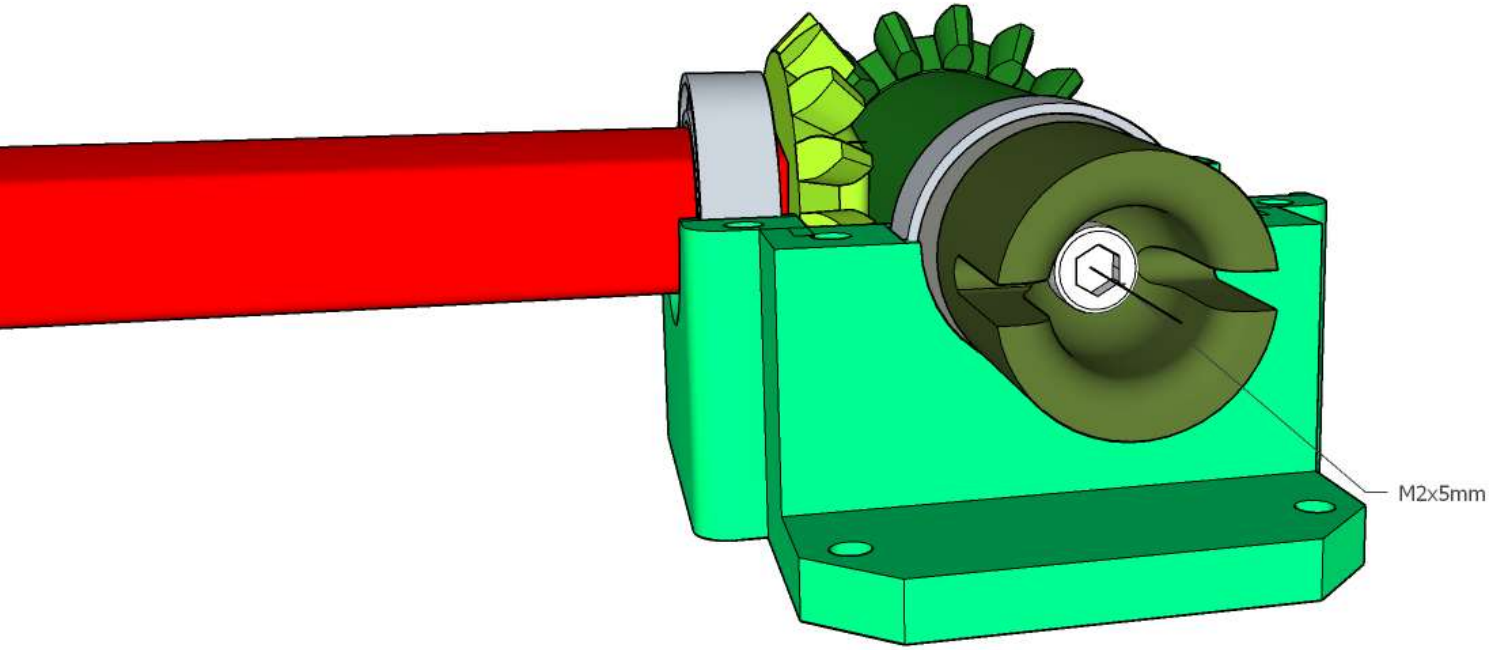

Step 7

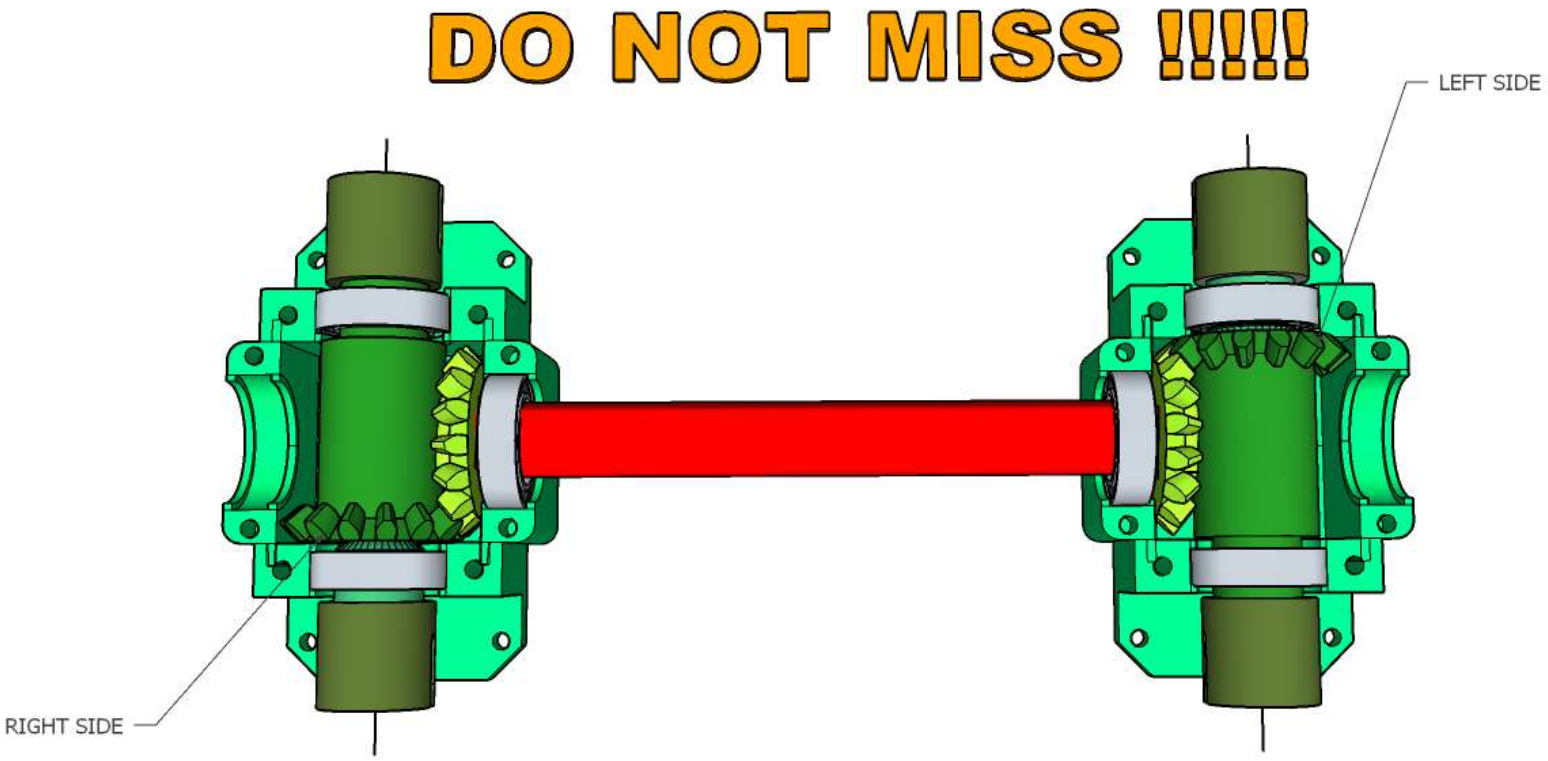

Step 8

The gears must be free - test the gears by hand

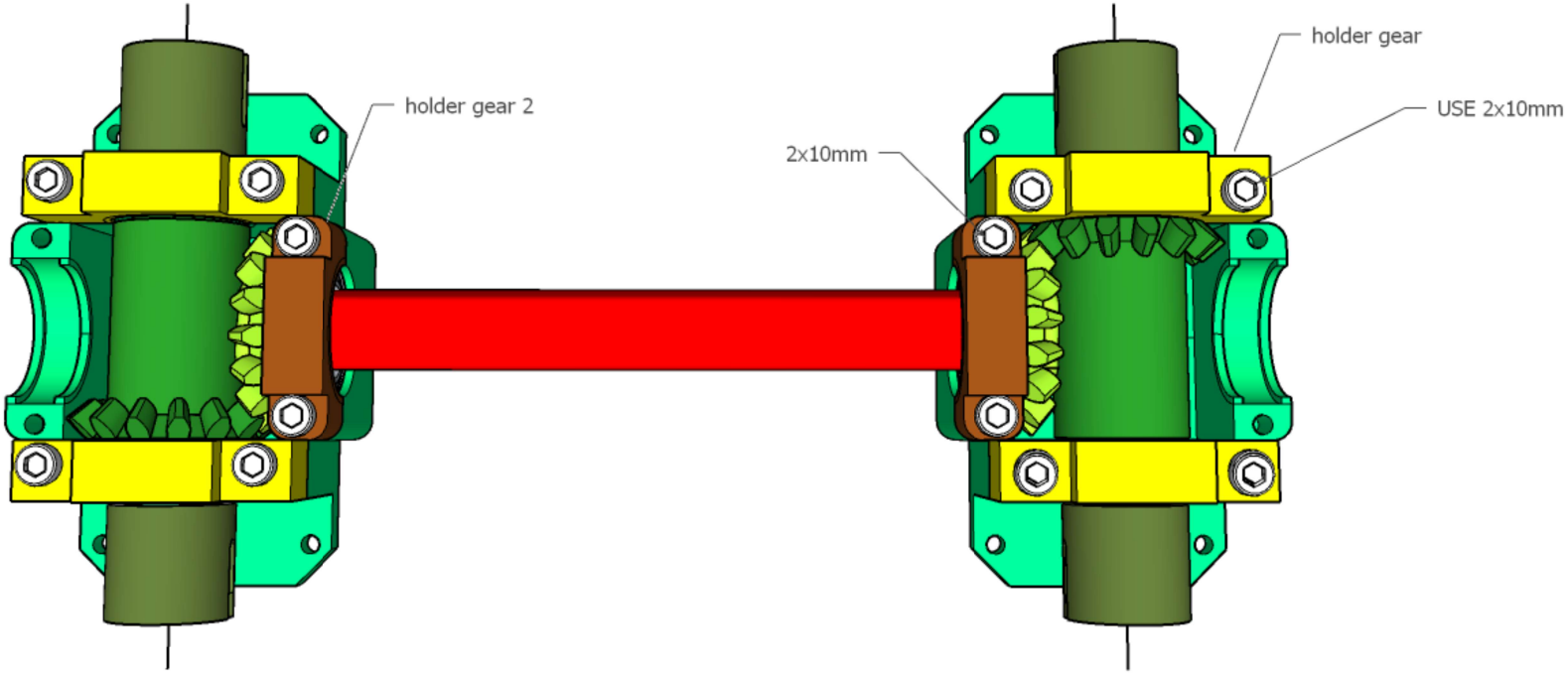

Step 9

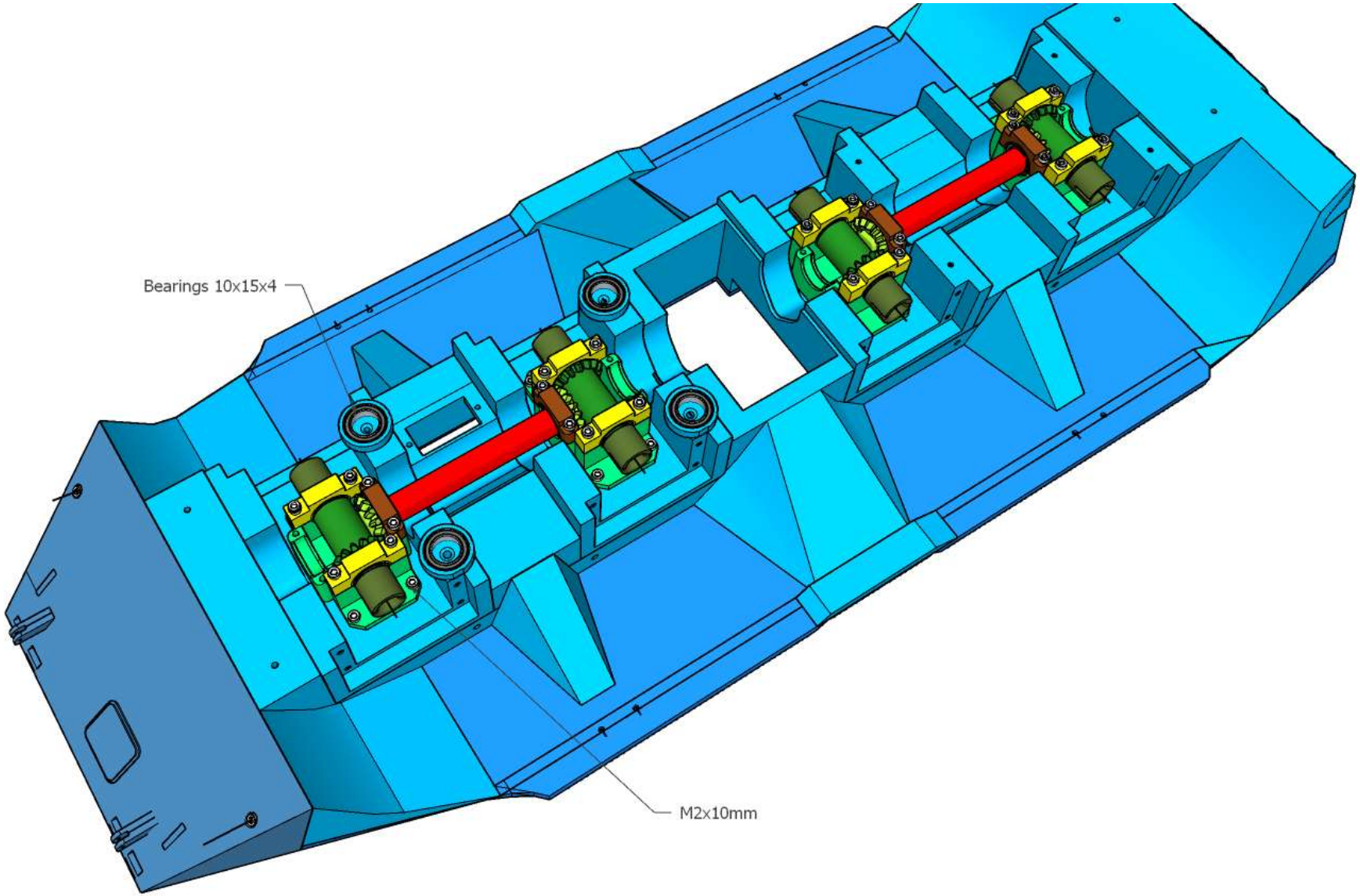

Step 10

Now you can paint the model.
the servo is the other way around so that the paint doesn't cover it - or put the servo away.

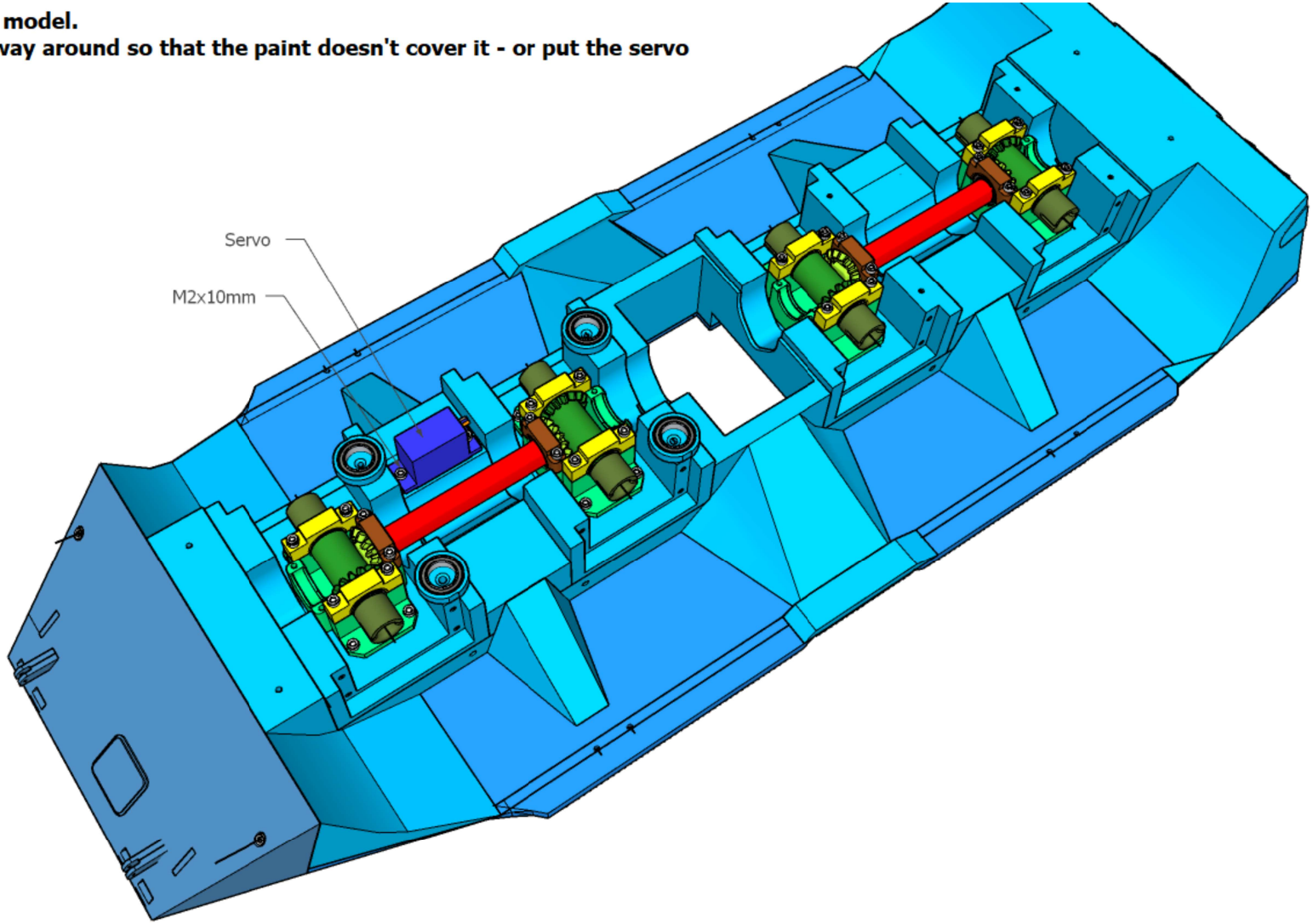

Step 11

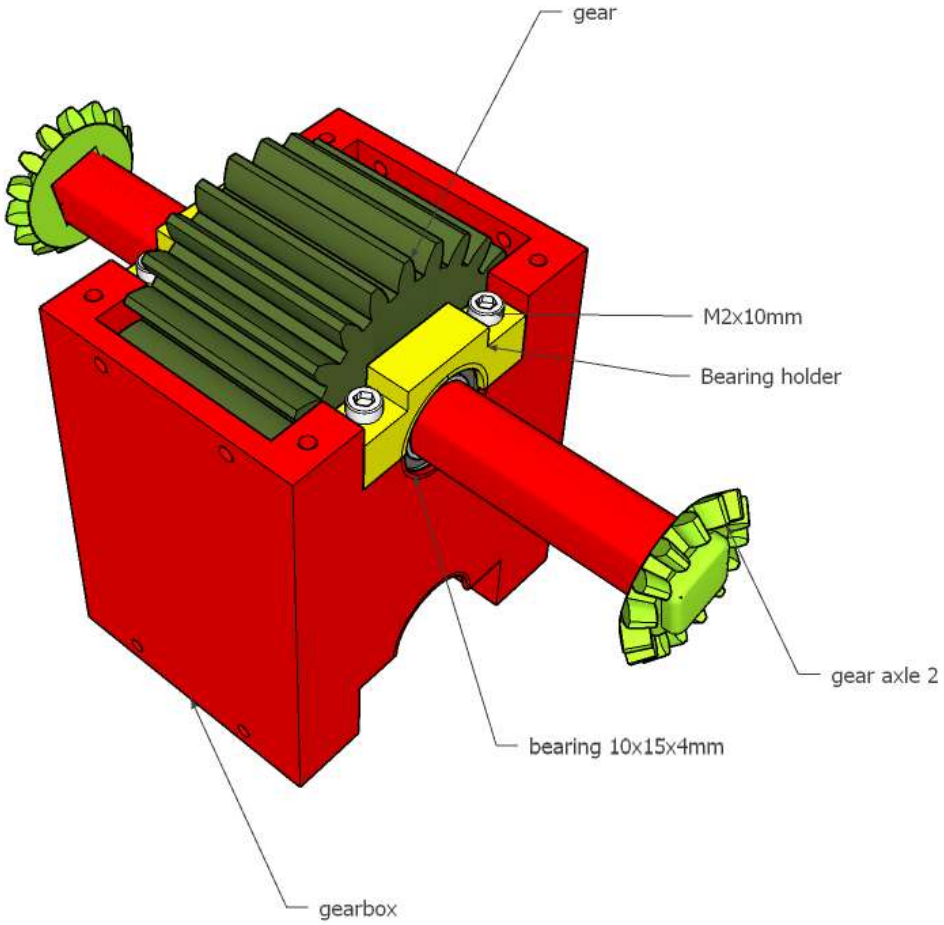
gear
M2x10mm
Bearing holder
gear axle 2
bearing 10x15x4mm
gearbox

Step 12

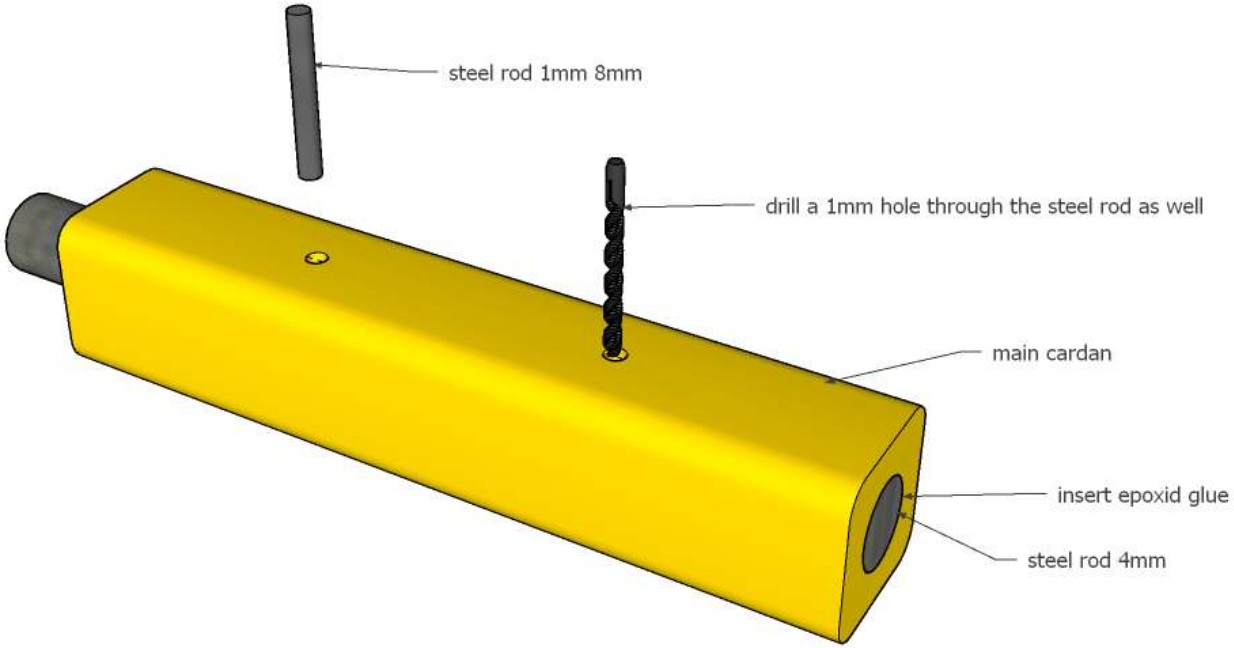
steel rod 1mm 8mm
drill a 1mm hole through the steel rod as well
main cardan
insert epoxid glue
steel rod 4mm

Step 13

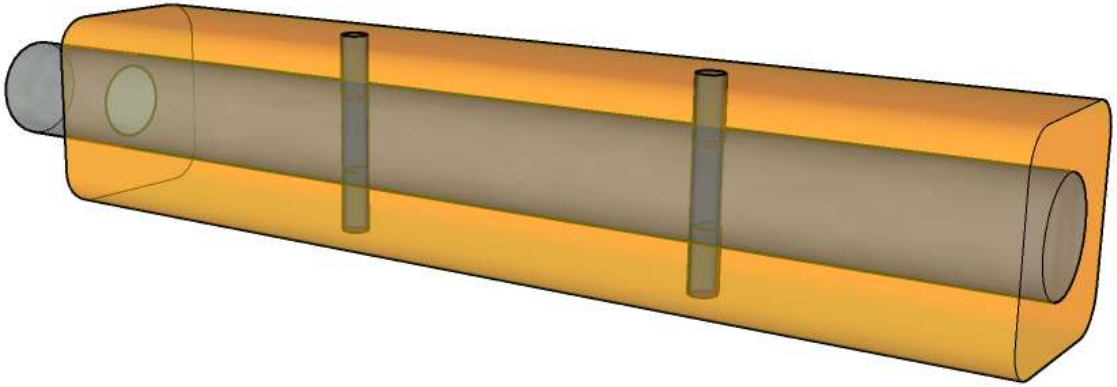

Step 14

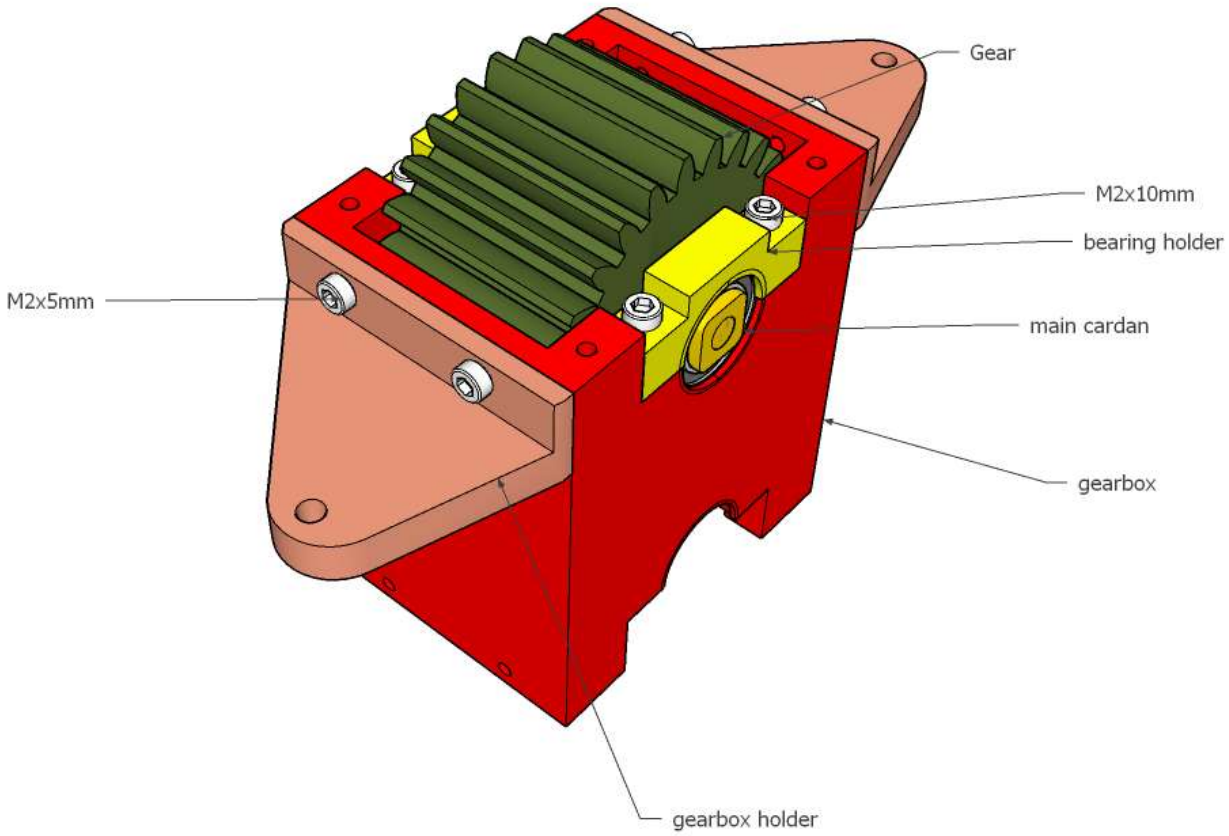
Gear
M2x10mm
bearing holder
M2x5mm
main cardan
gearbox
gearbox holder

Step 15

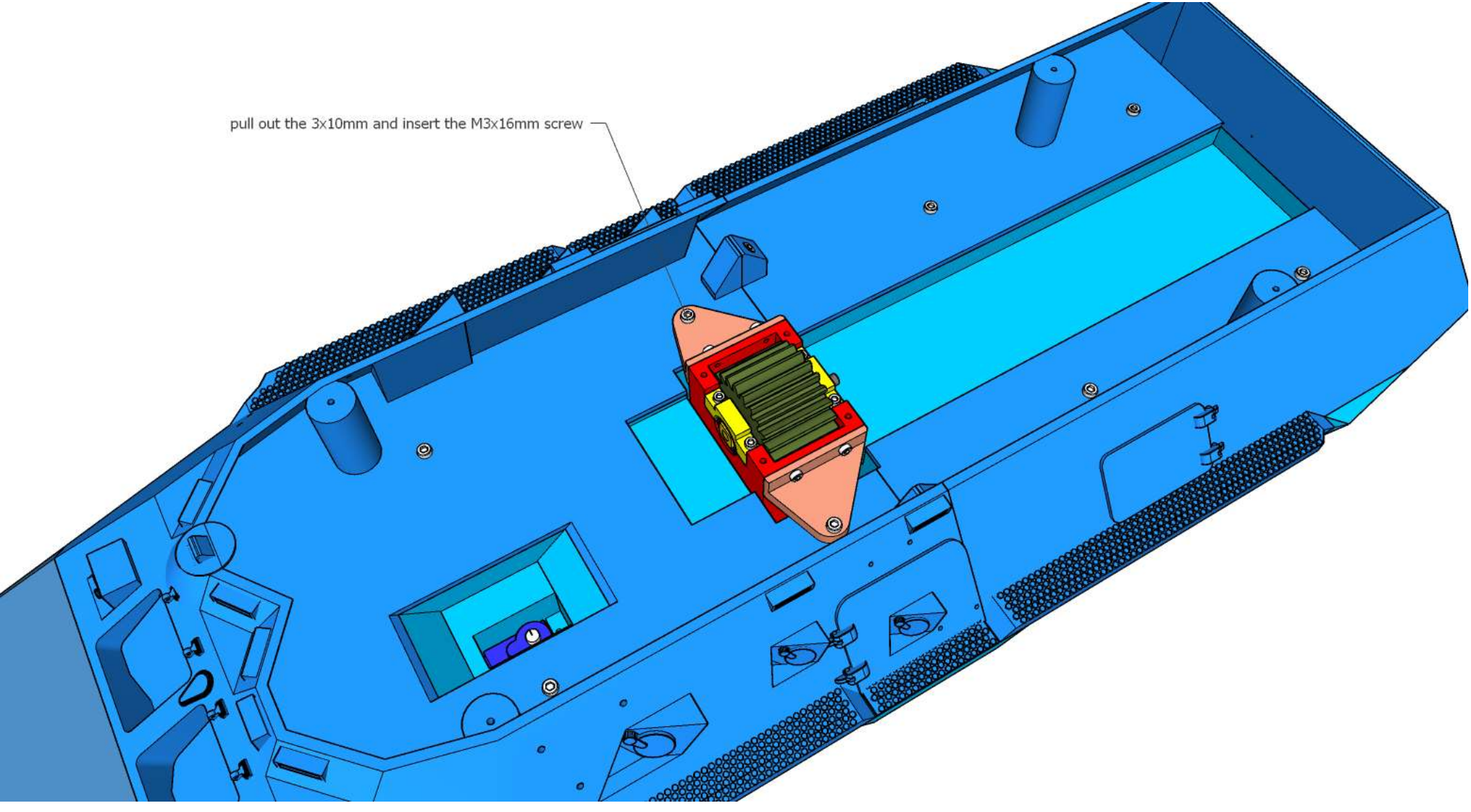

Step 16

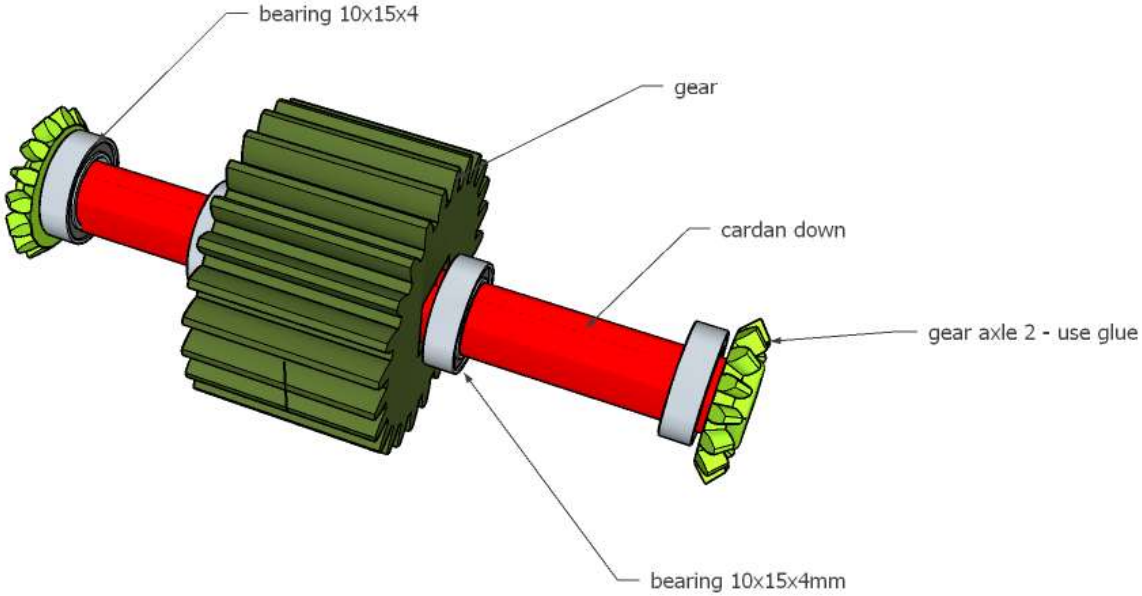
bearing 10x15x4
gear
cardan down
gear axle 2 - use glue
bearing 10x15x4mm

Step 17

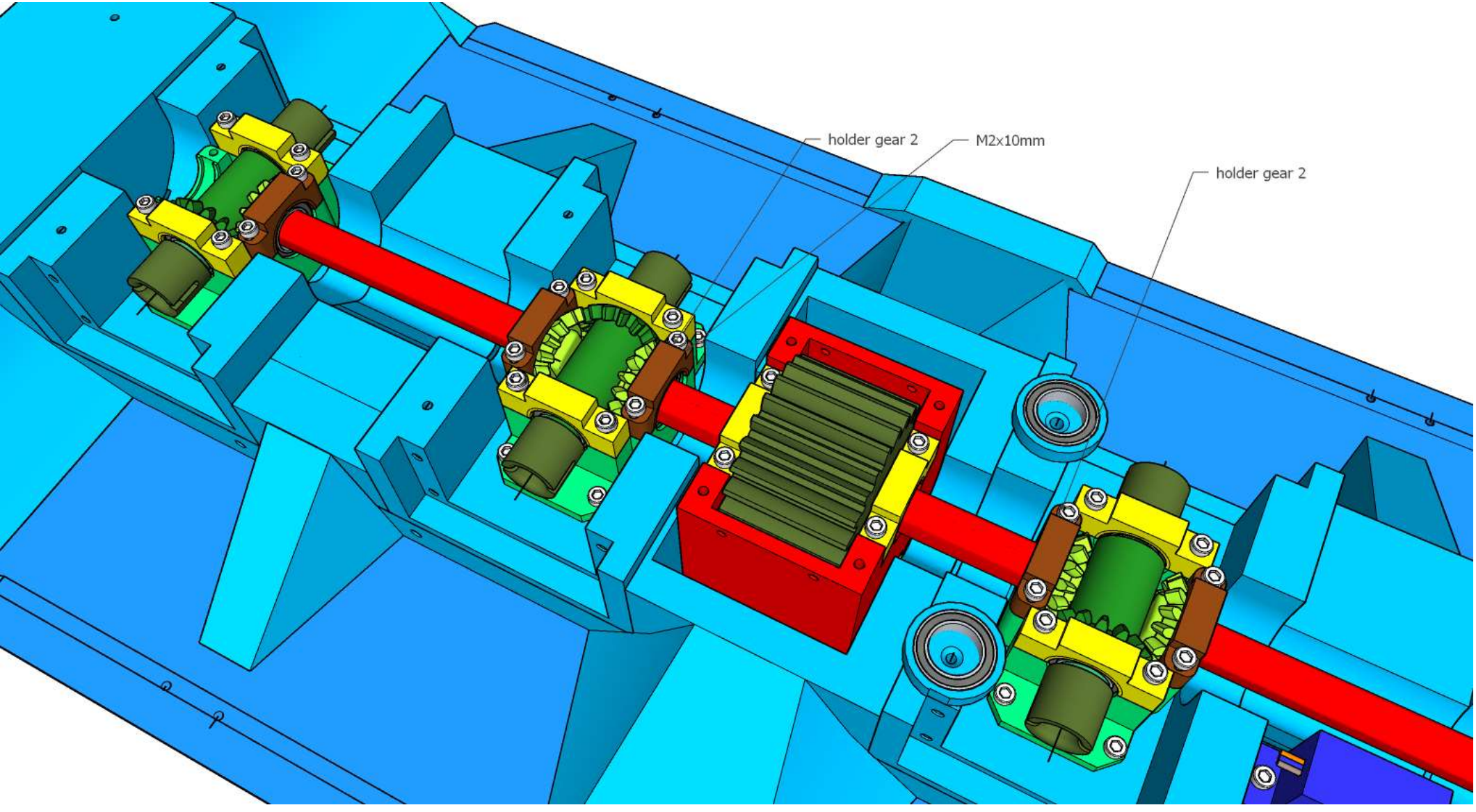

Step 18

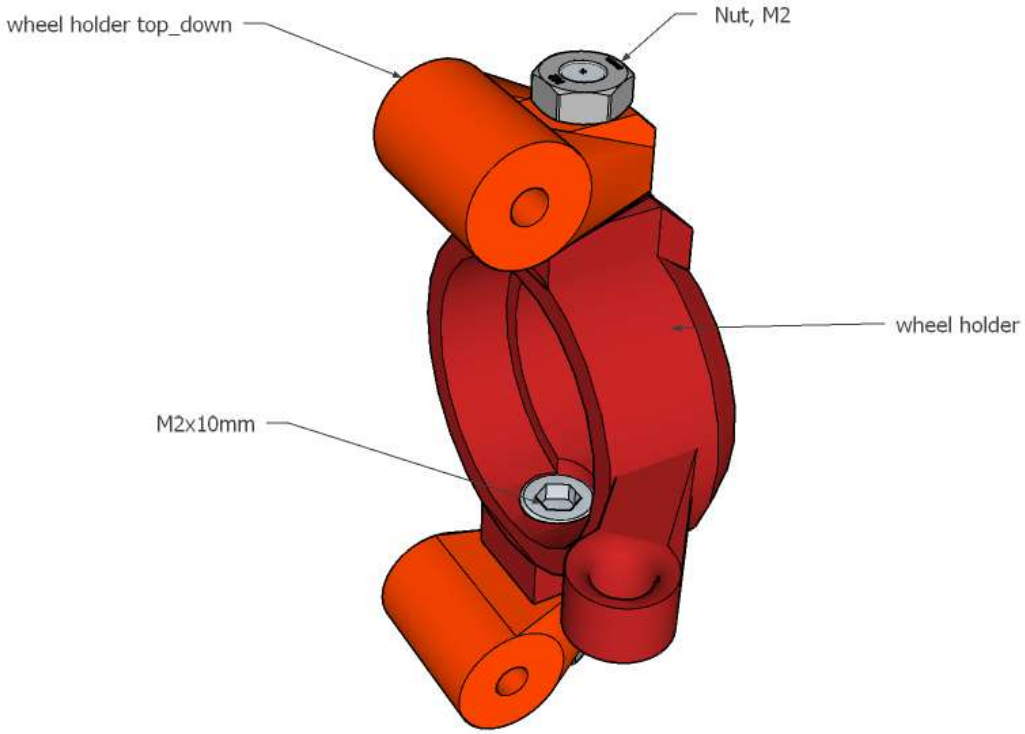

Step 19

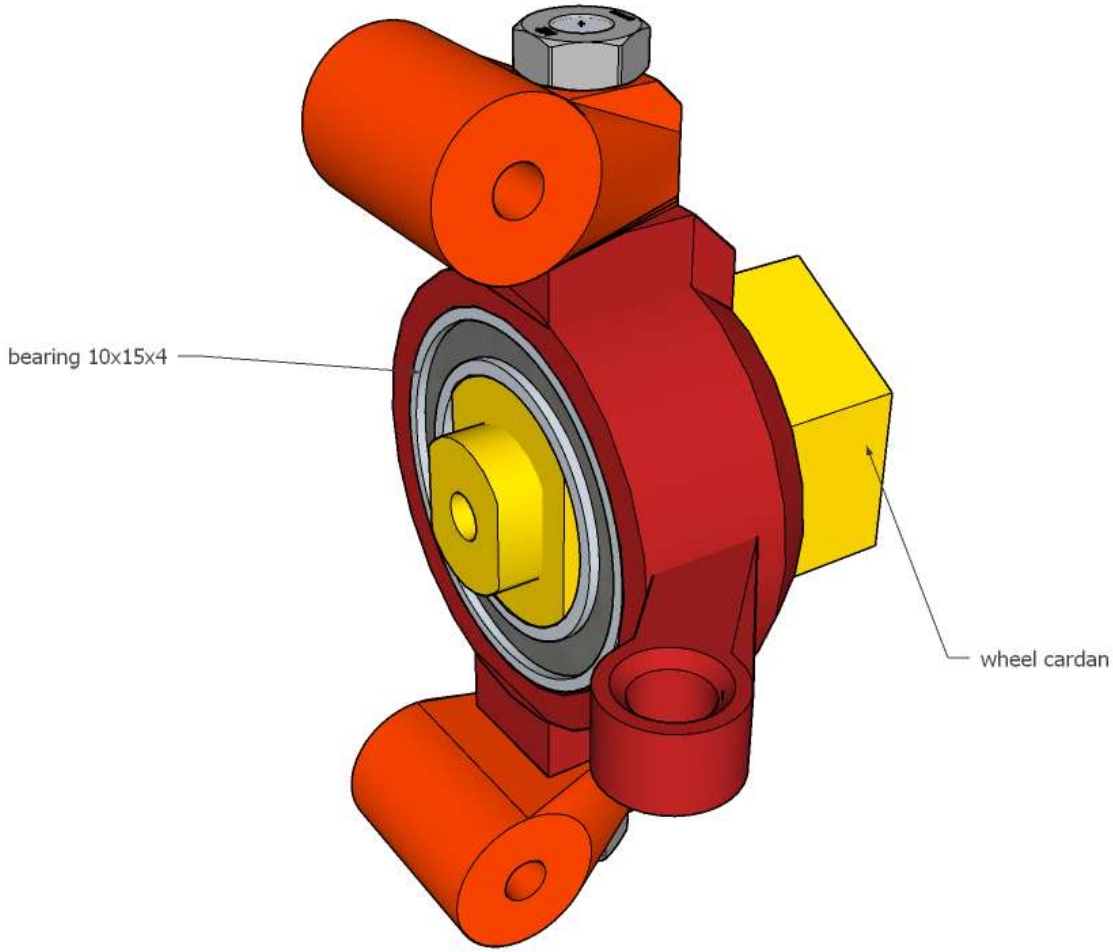

Step 20

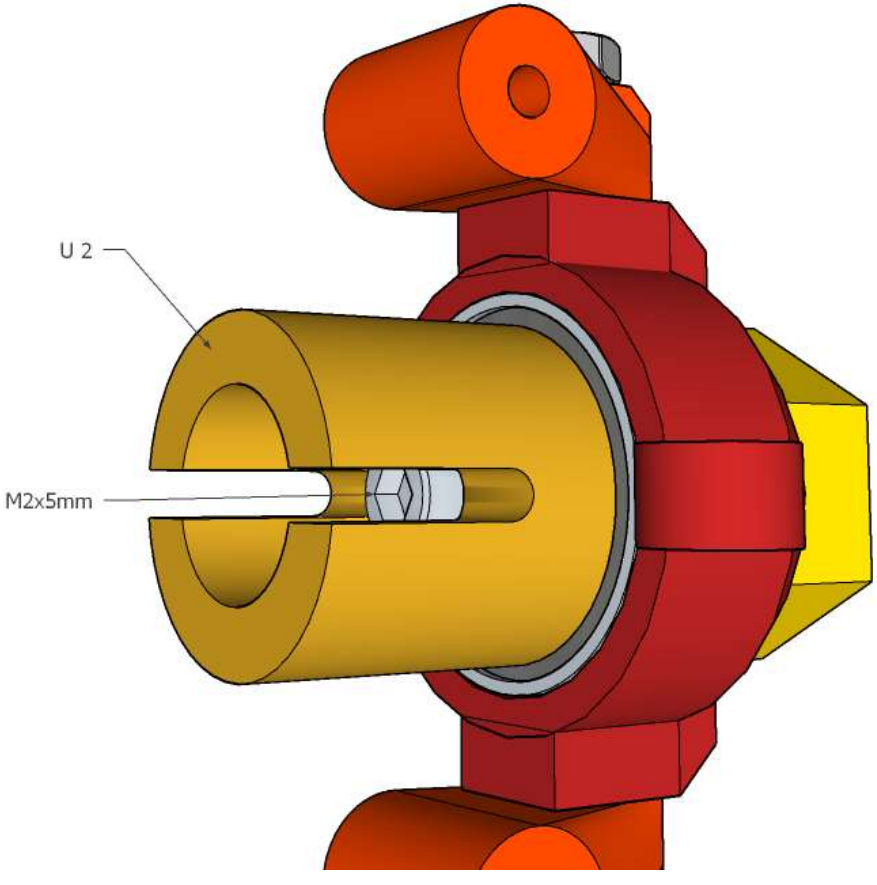

Step 21

Enter text

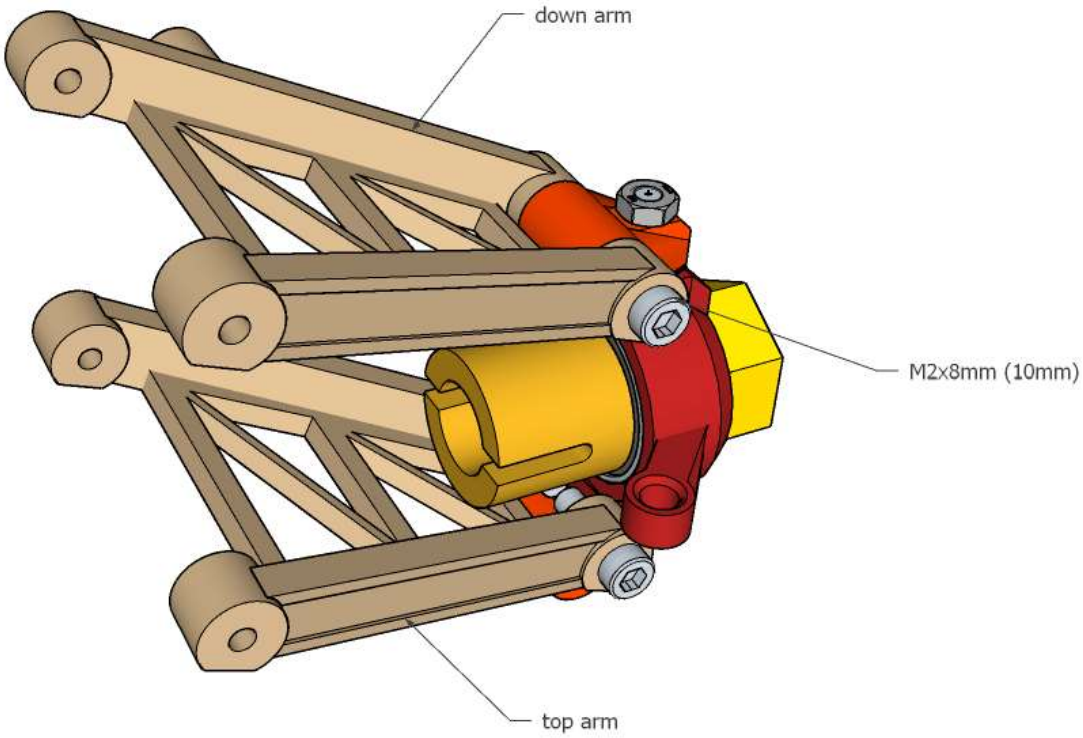

Step 22

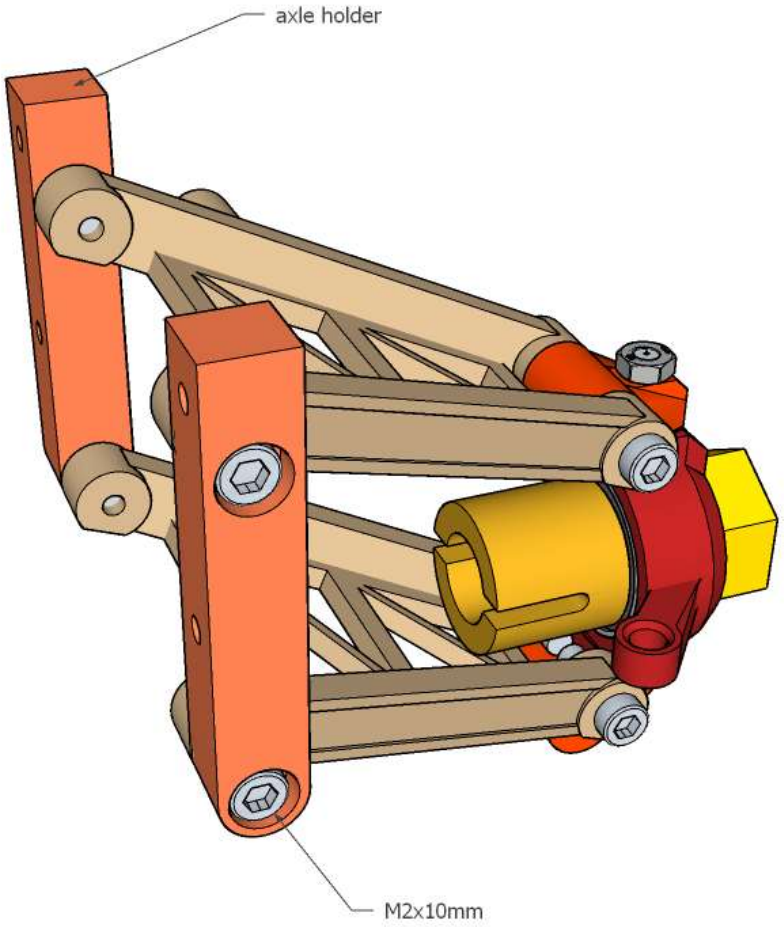

Step 23

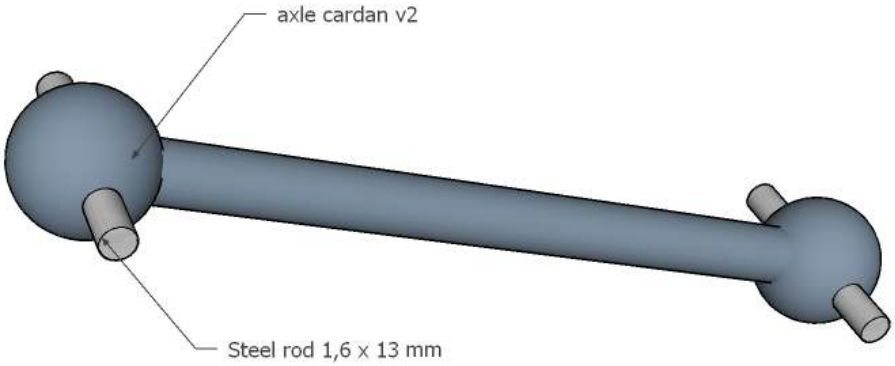

Step 24

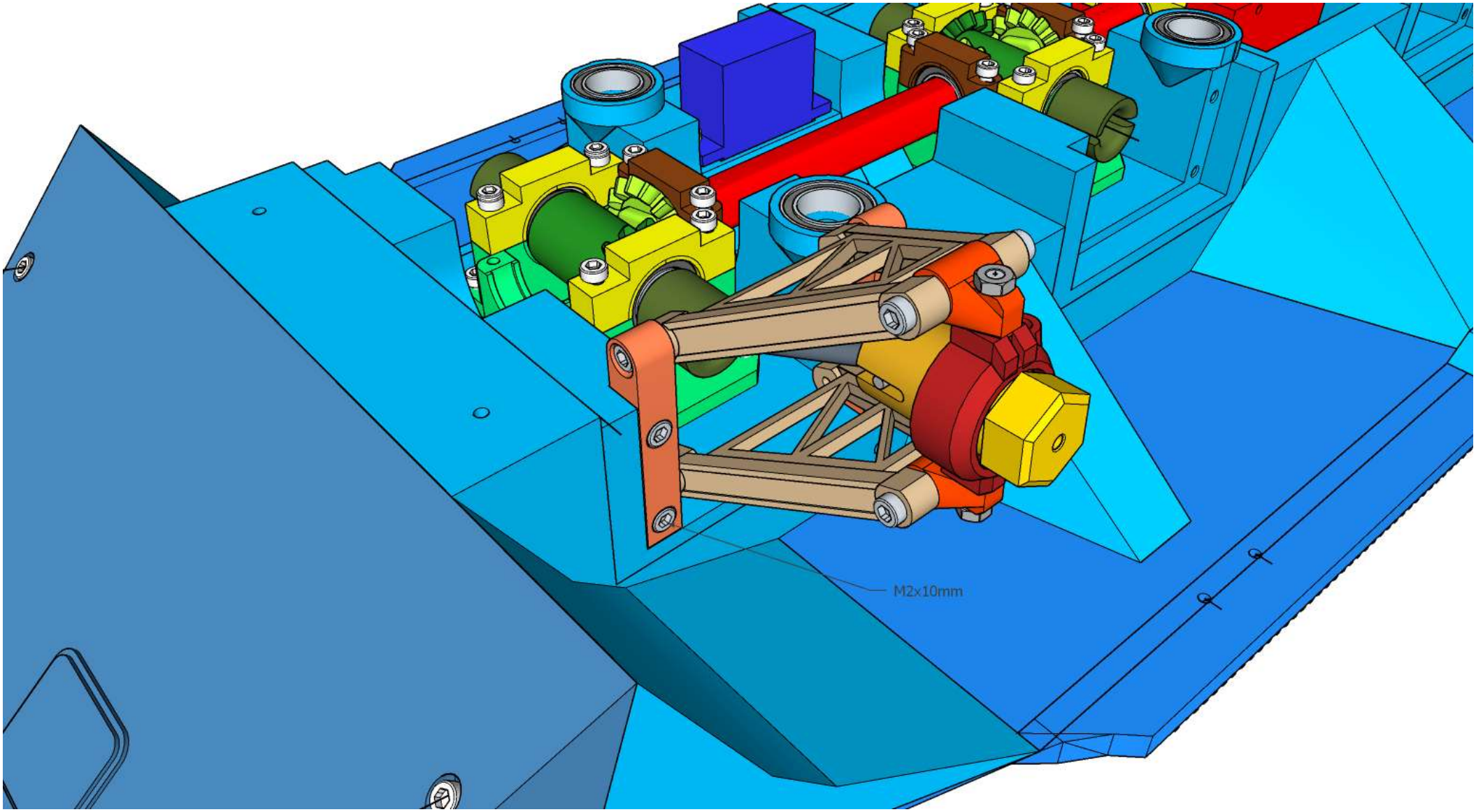

Step 25

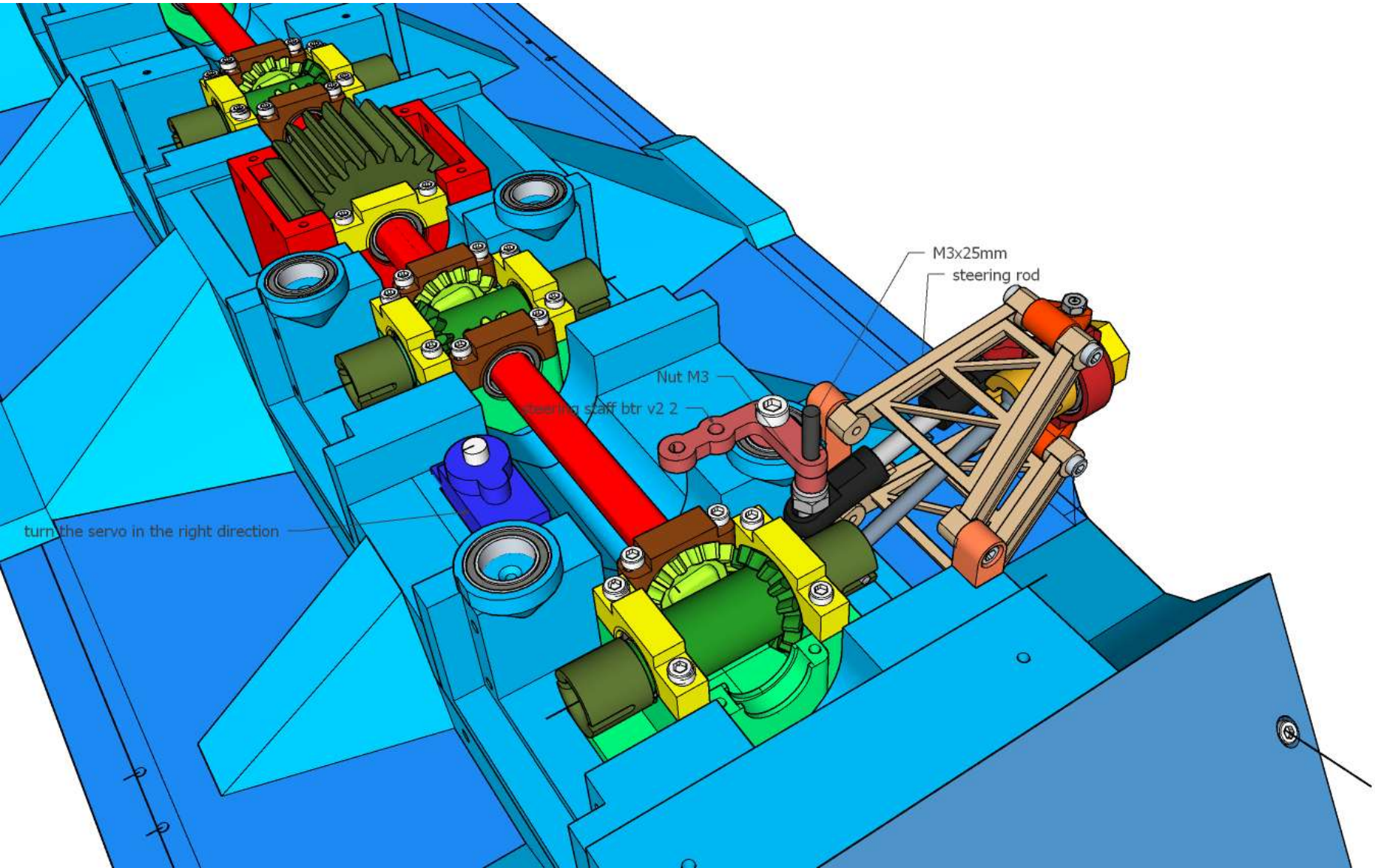
M3x25mm
steering rod
Nut M3
Steering staff btr v2 2
turn the servo in the right direction

Step 26

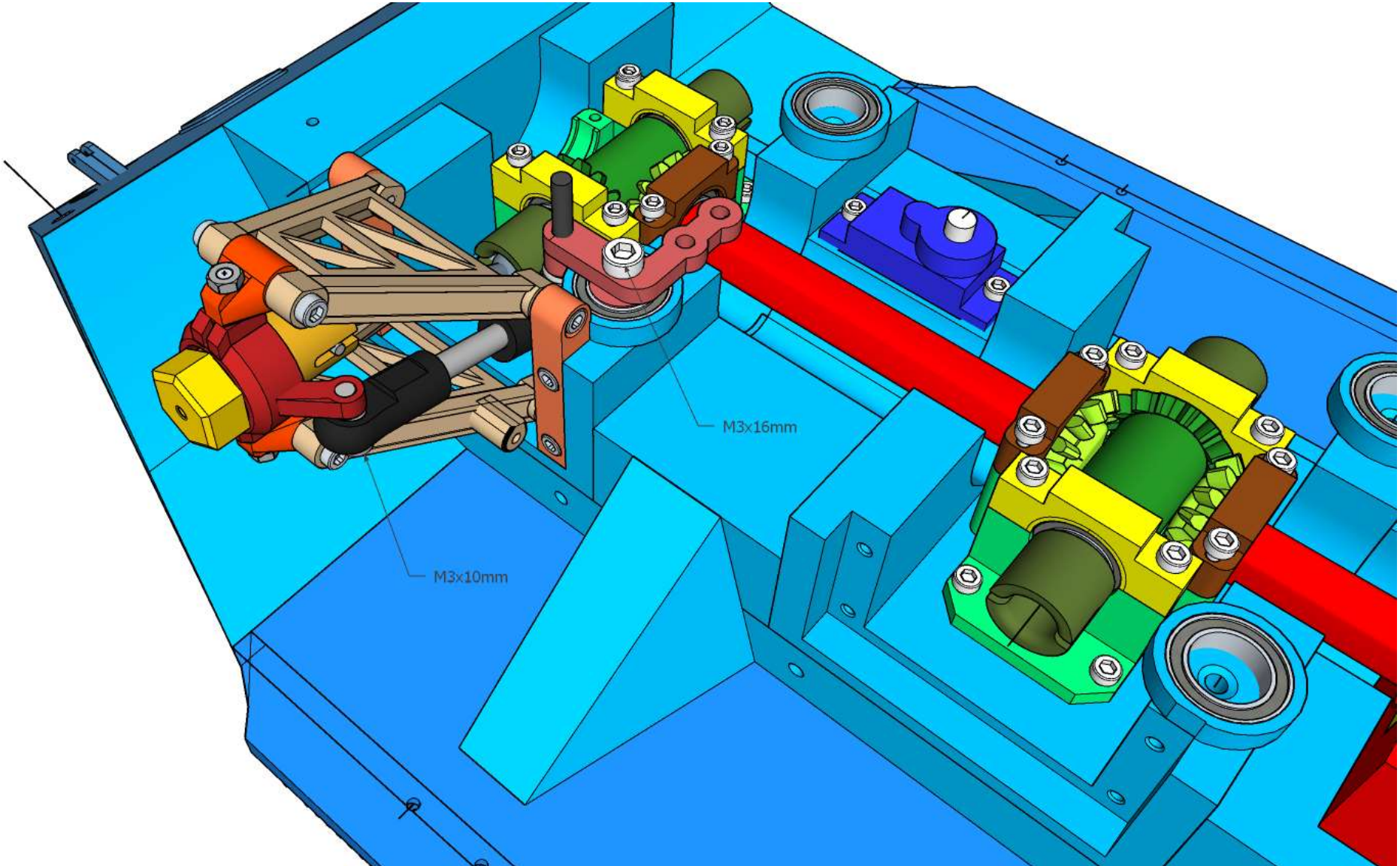

Step 27

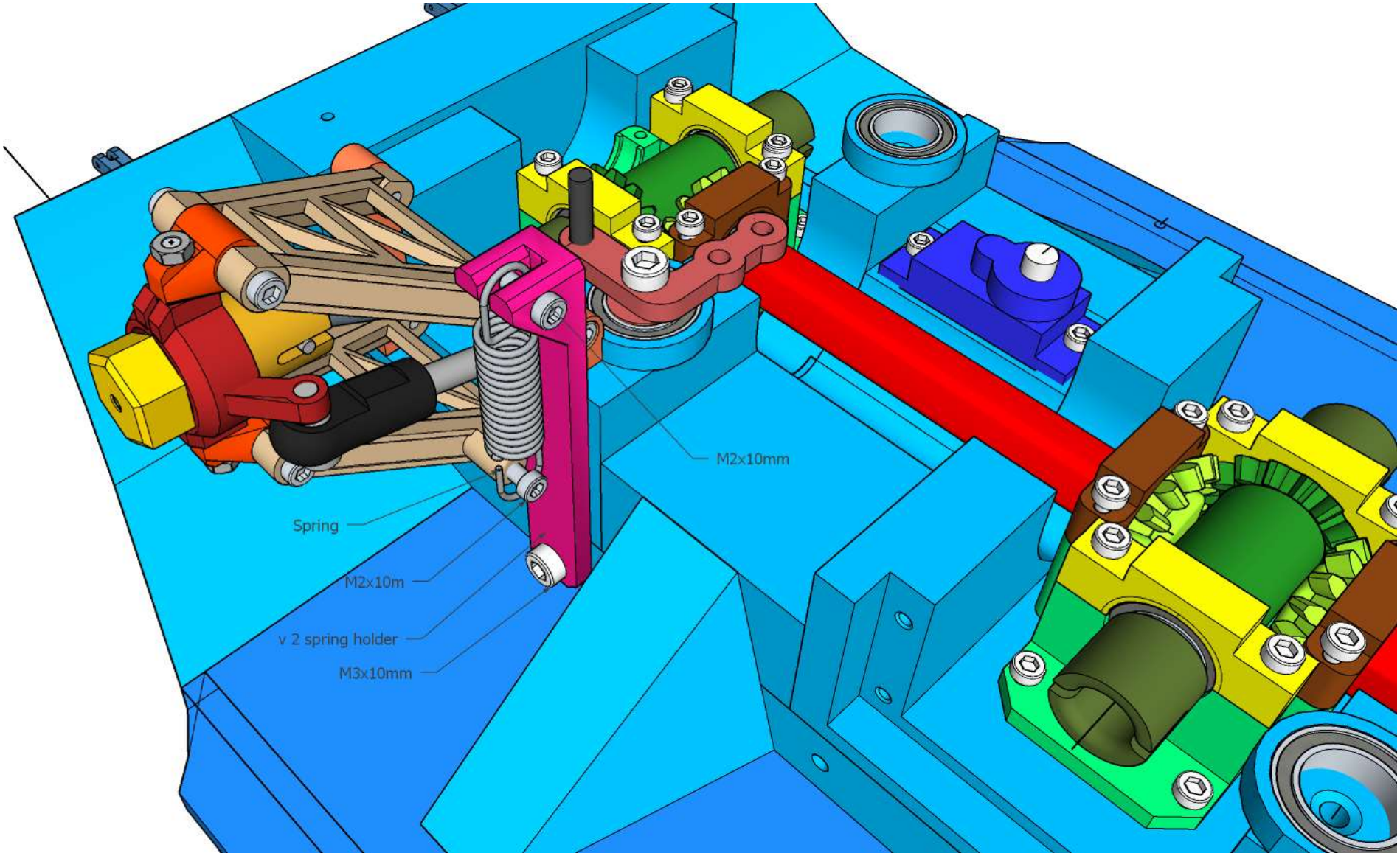

Step 28

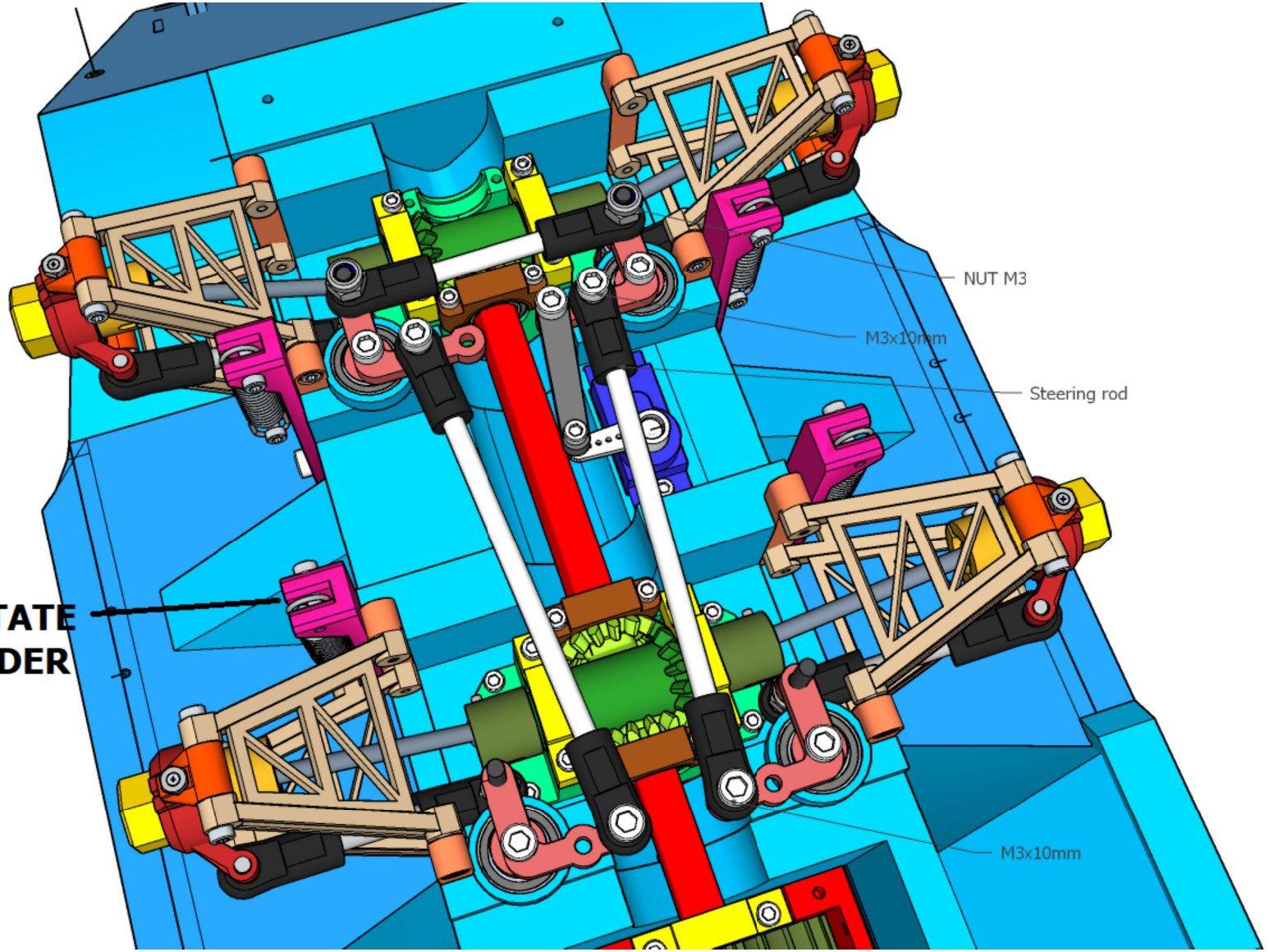

MIRROR ROTATE SPRING HOLDER

Step 29

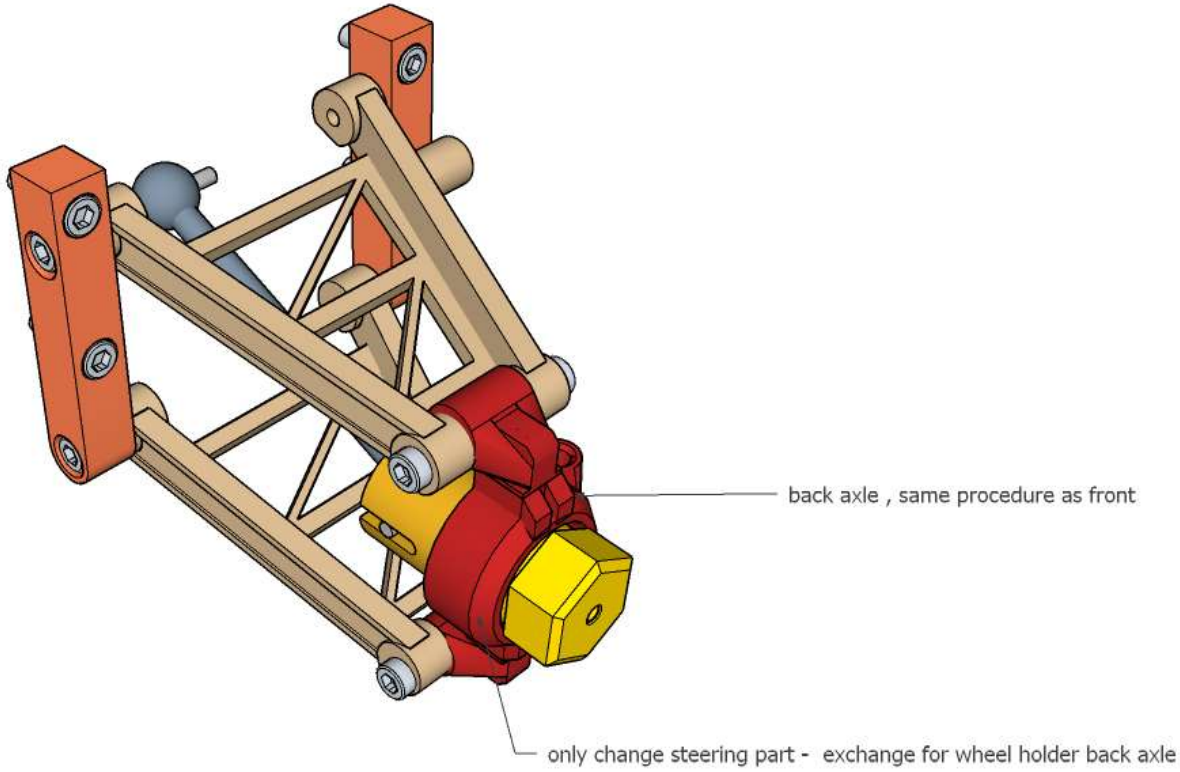
back axle , same procedure as front
only change steering part - exchange for wheel holder back axle

Step 30

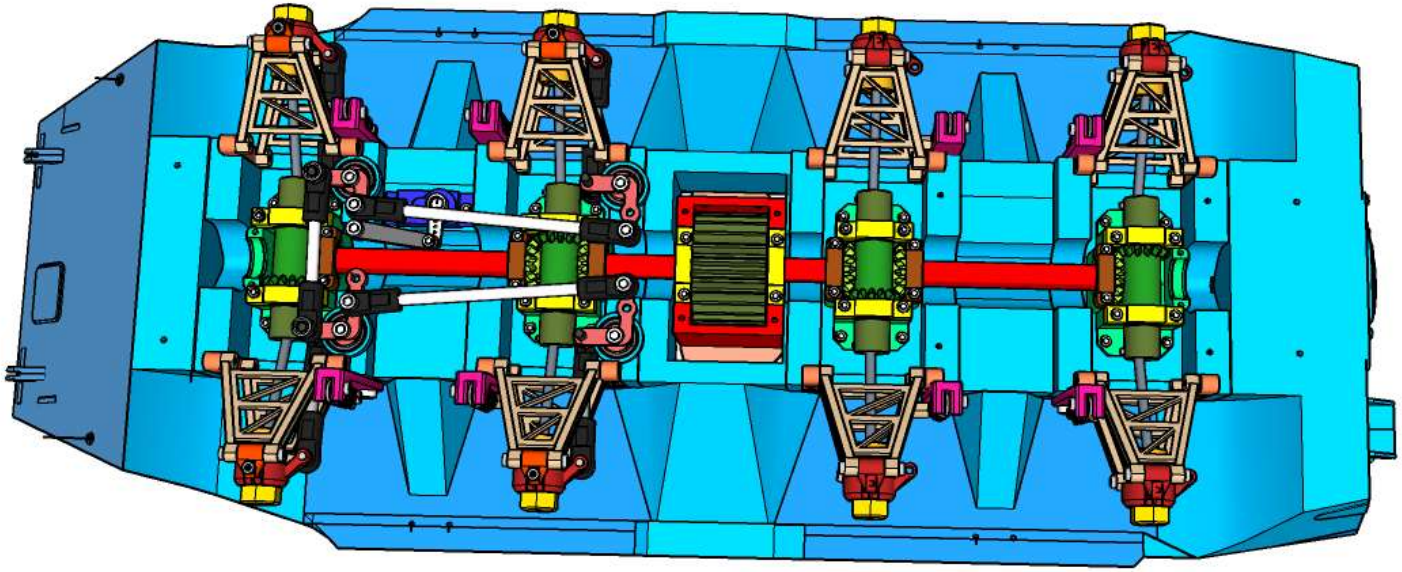

Step 31

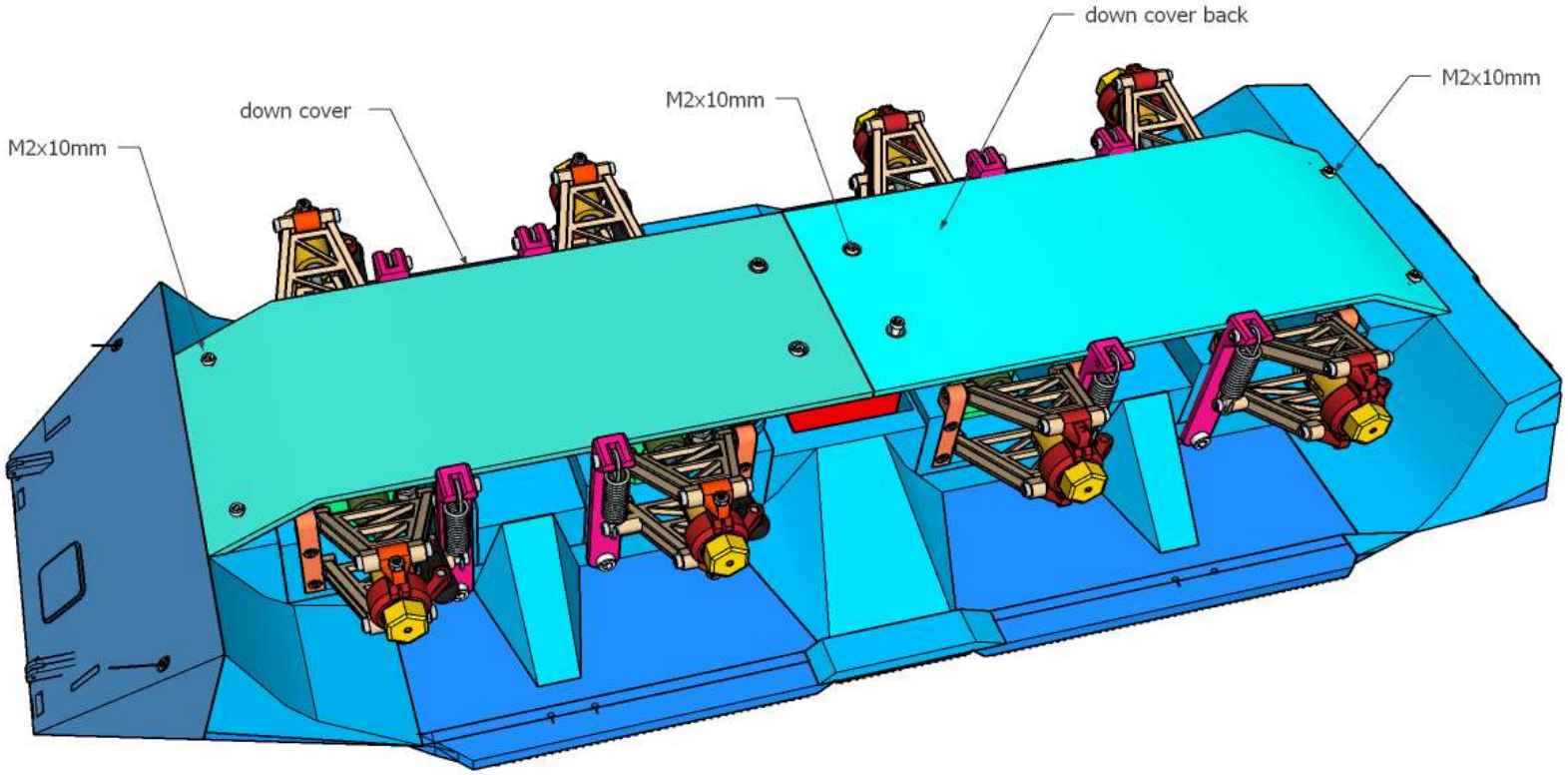

Step 32

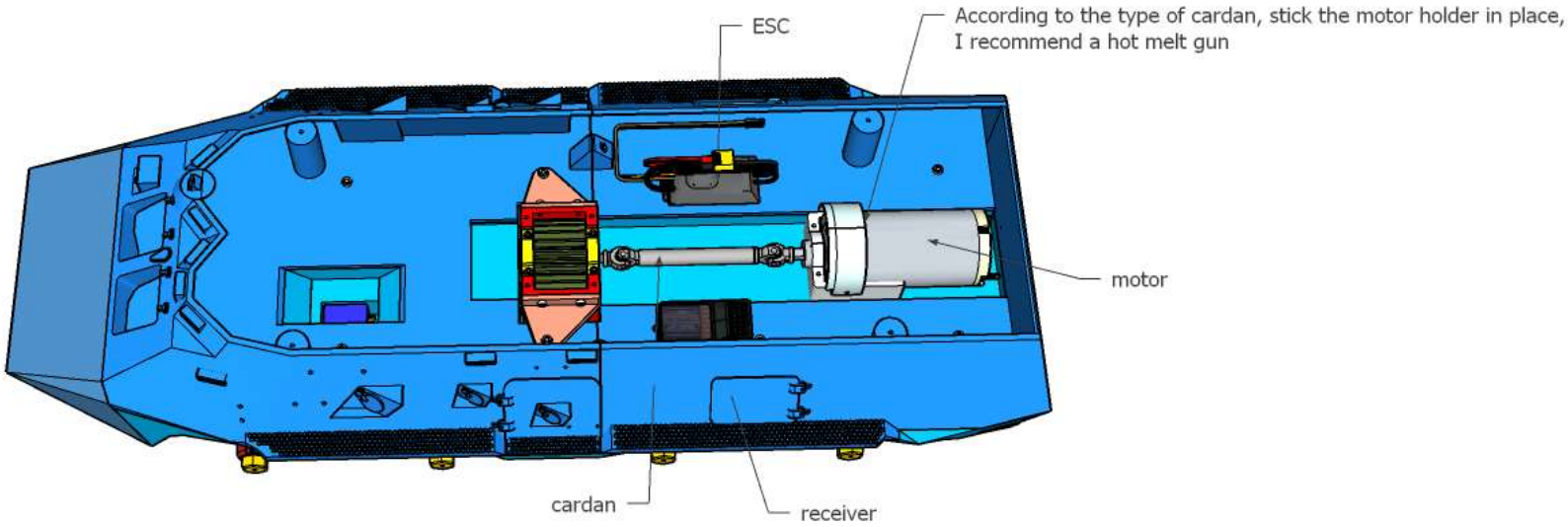
ESC
According to the type of cardan, stick the motor holder in place,
I recommend a hot melt gun
motor
cardan
receiver

Step 33

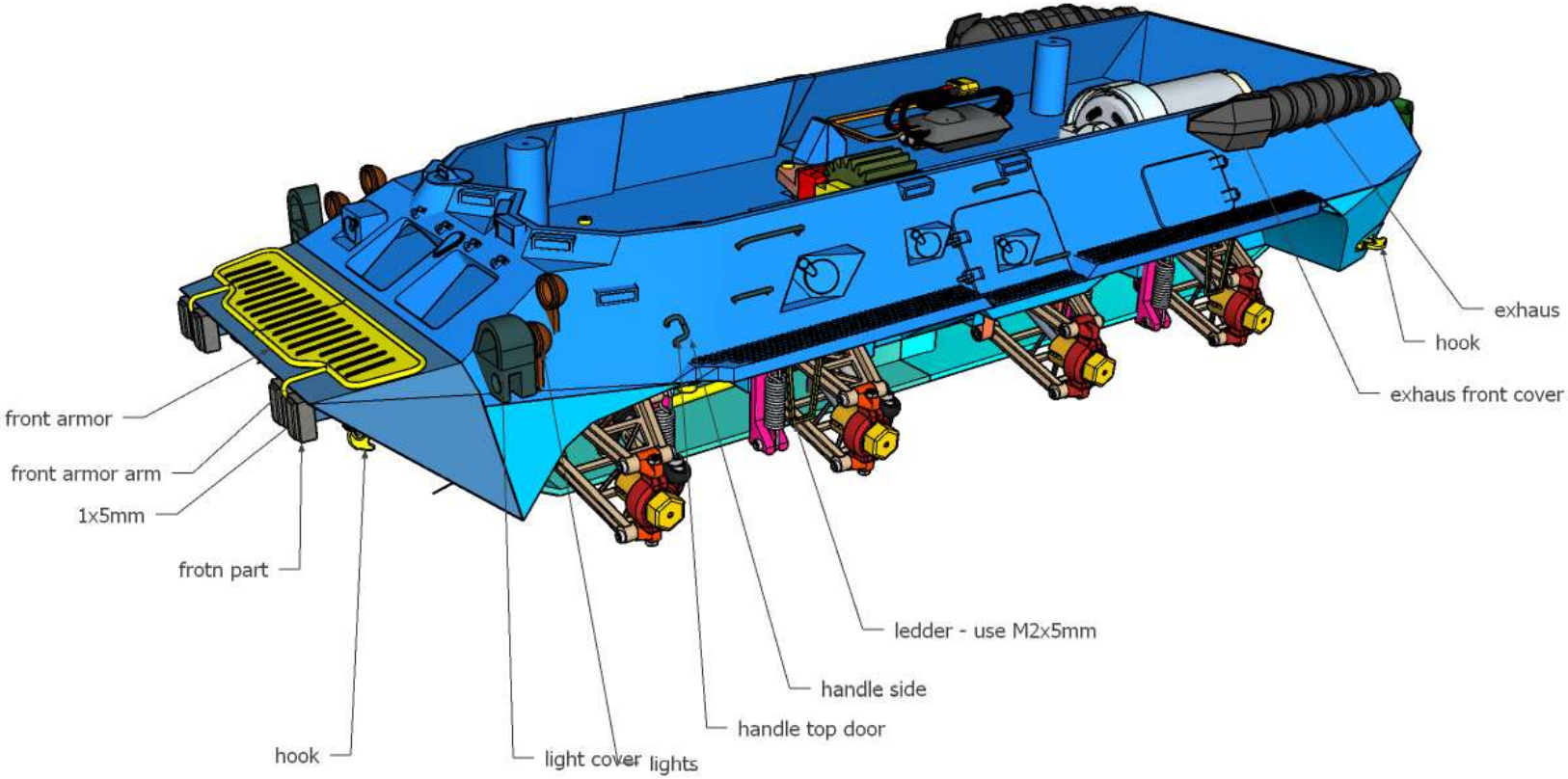
exhaus
hook
exhaus front cover
front armor
front armor arm
1x5mm
frotn part
ledder - use M2x5mm
handle side
handle top door
hook
light cover
lights

Step 34

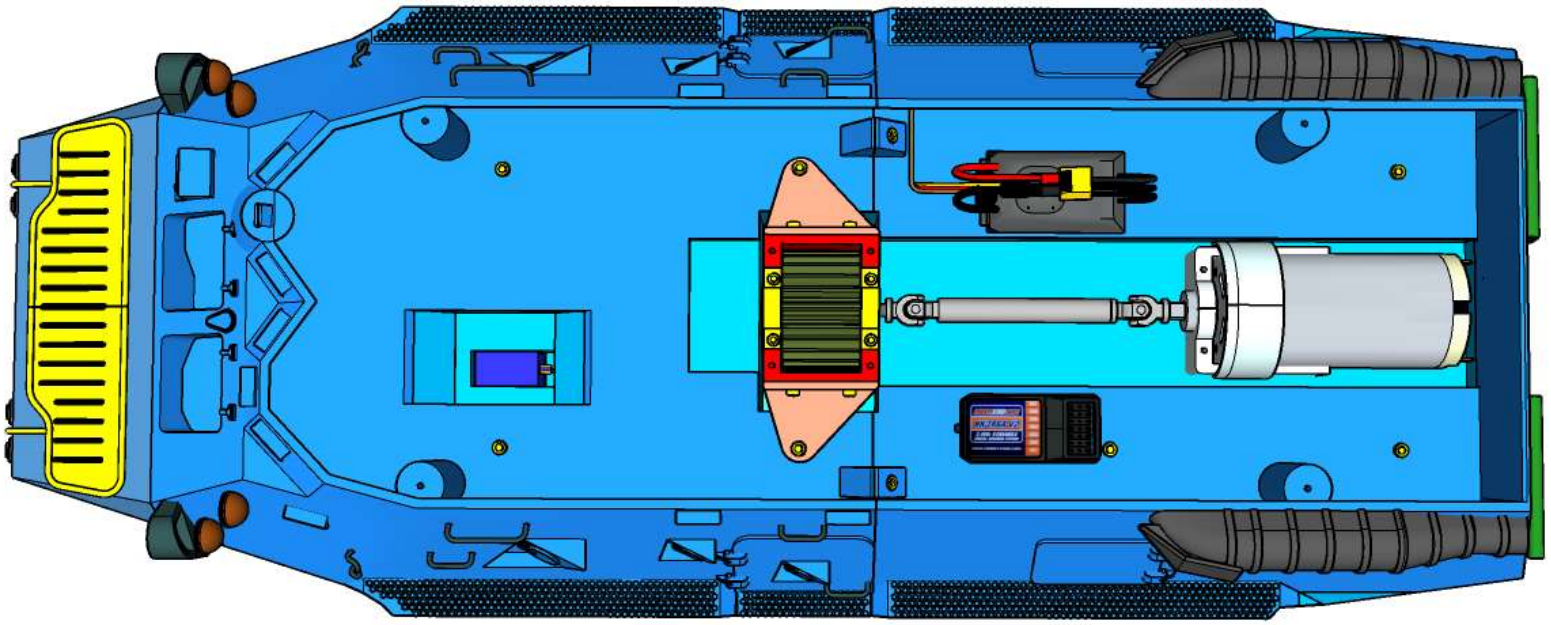

Step 35

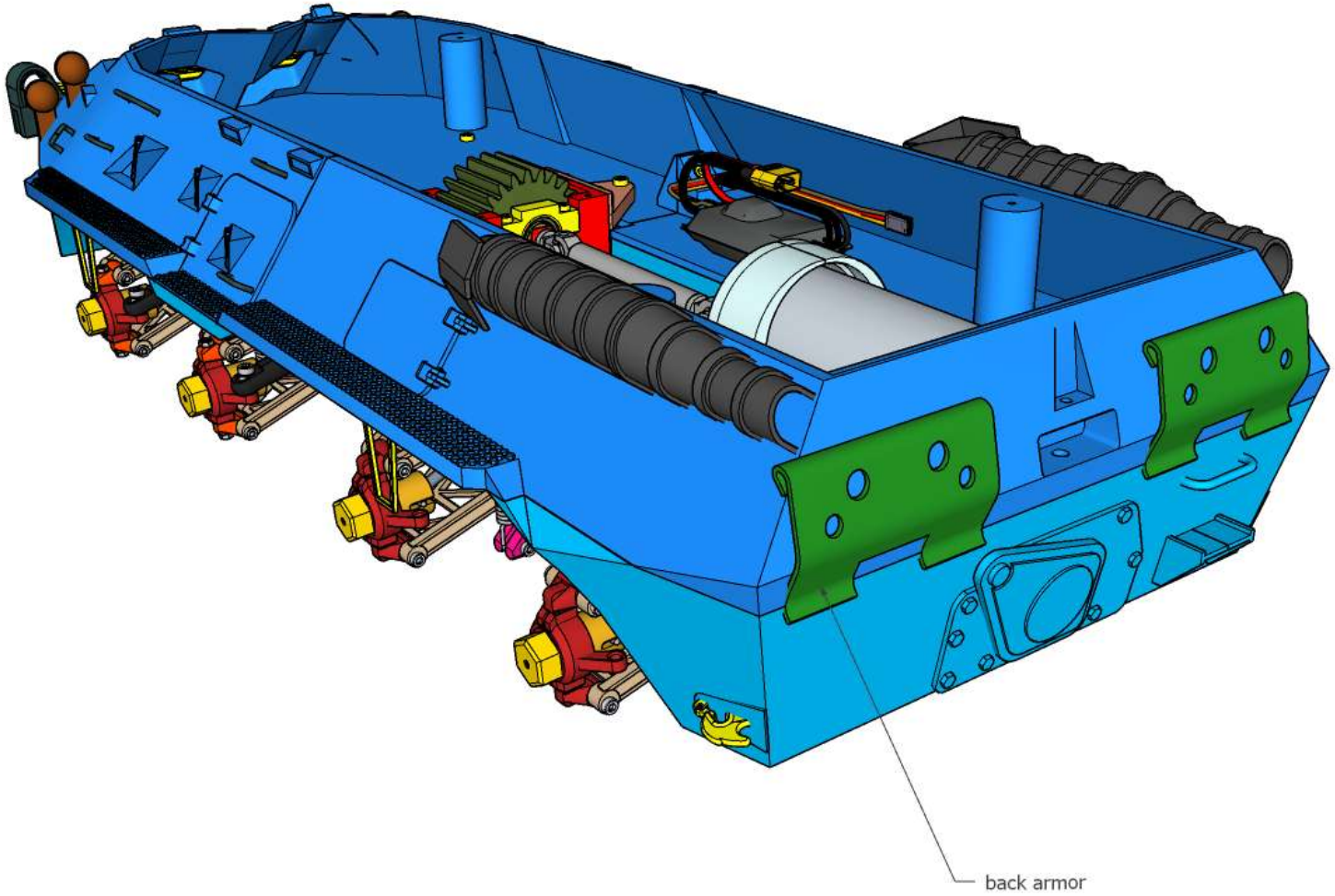

Step 36

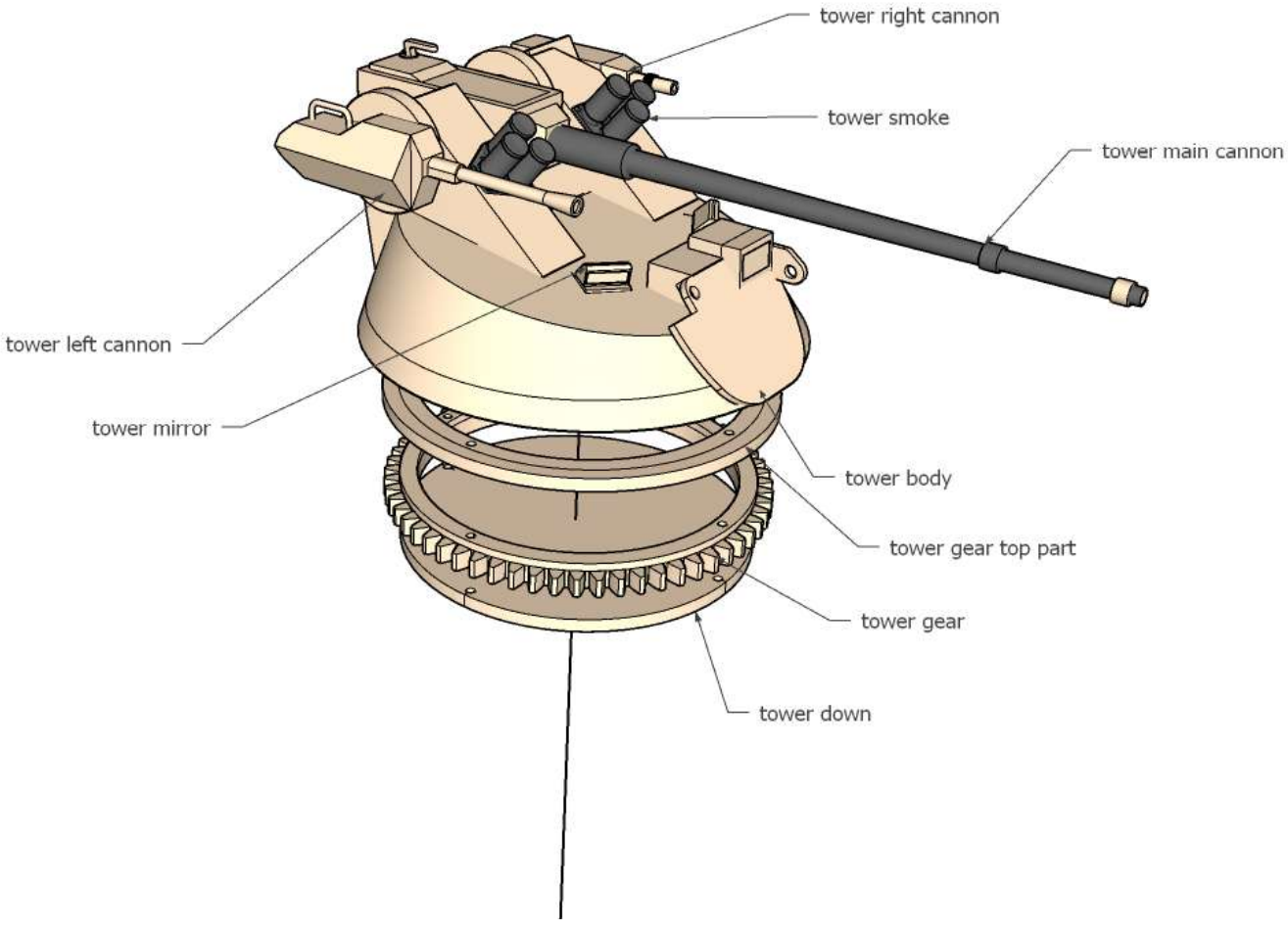
tower right cannon
tower smoke
tower main cannon
tower left cannon
tower mirror
tower body
tower gear top part
tower gear
tower down

Step 37

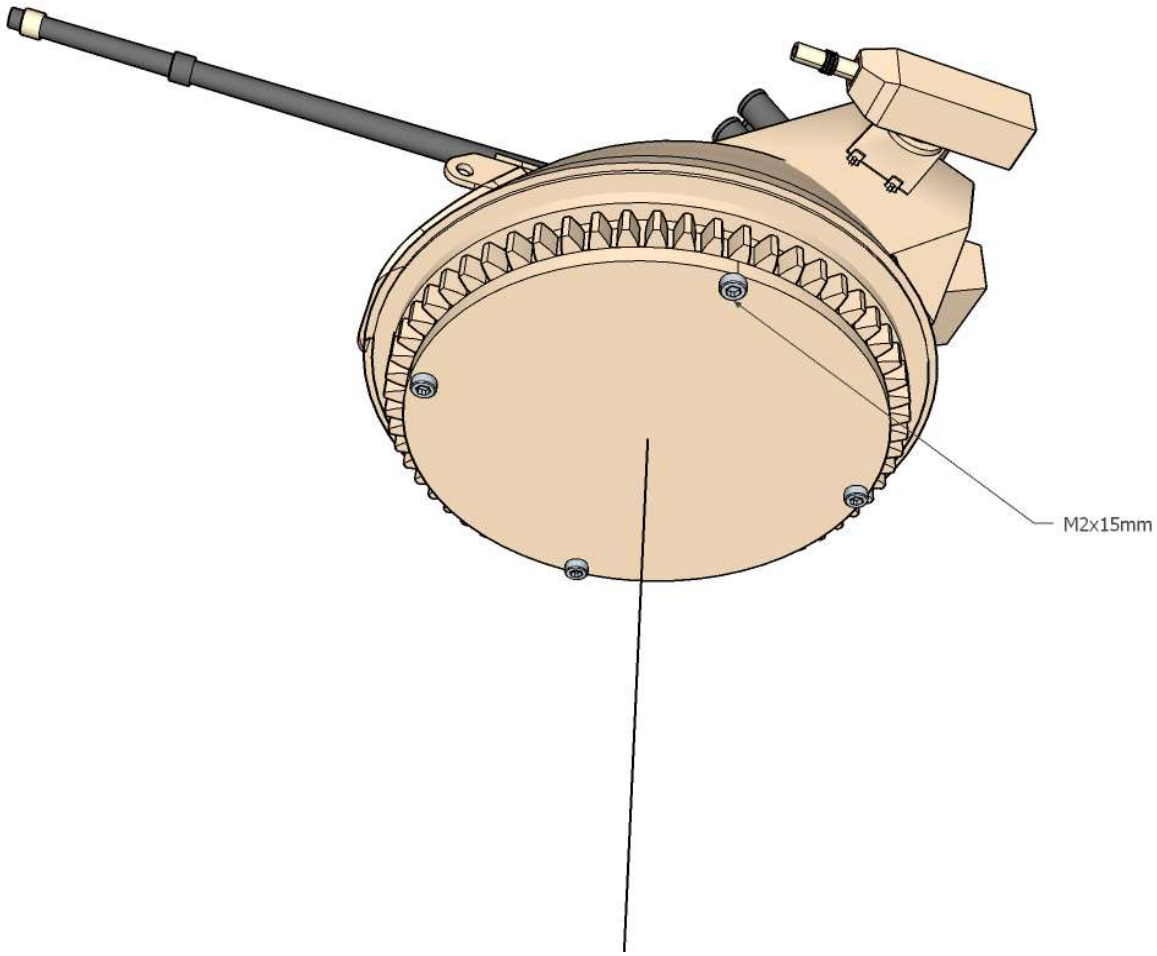

Step 38

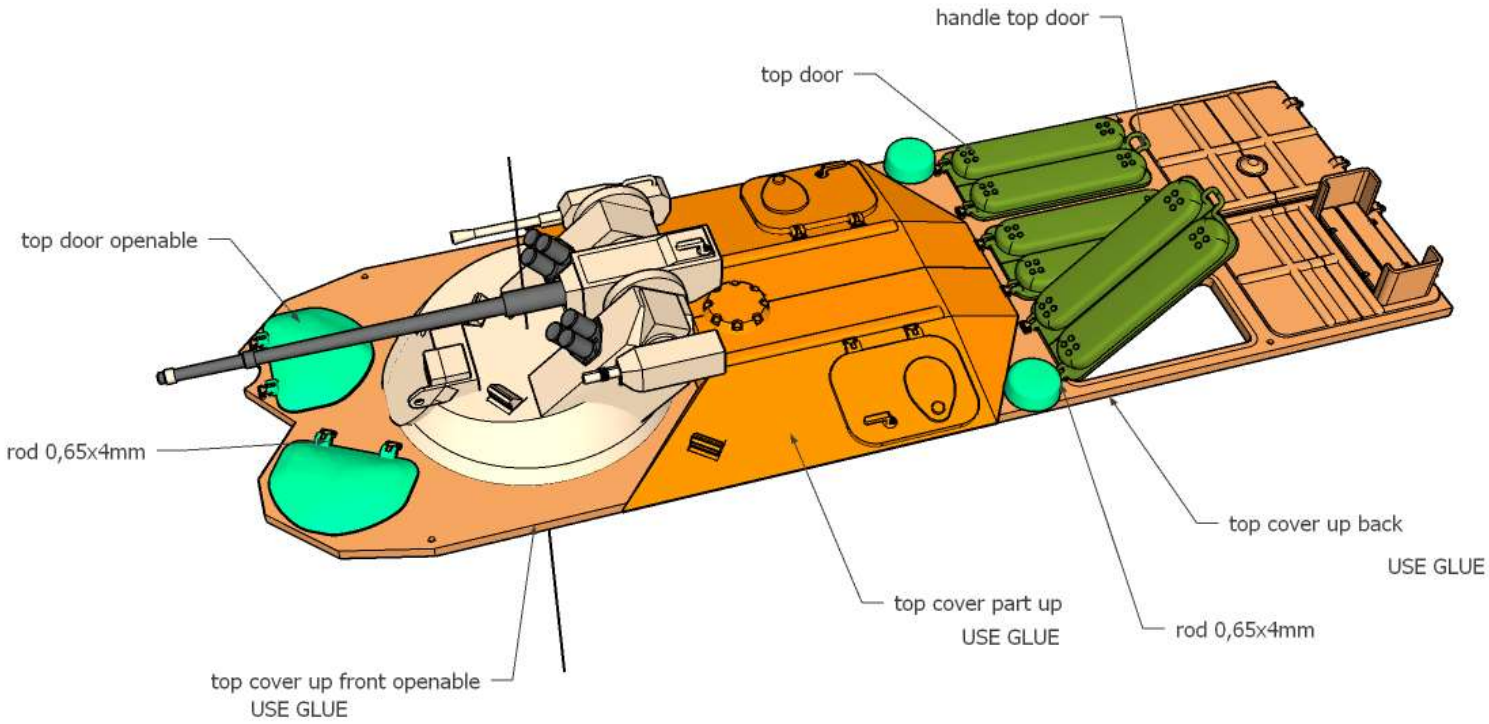
handle top door
top door
top door openable
rod 0,65x4mm
top cover up back
USE GLUE
top cover part up
USE GLUE
rod 0,65x4mm
top cover up front openable
USE GLUE

Step 39

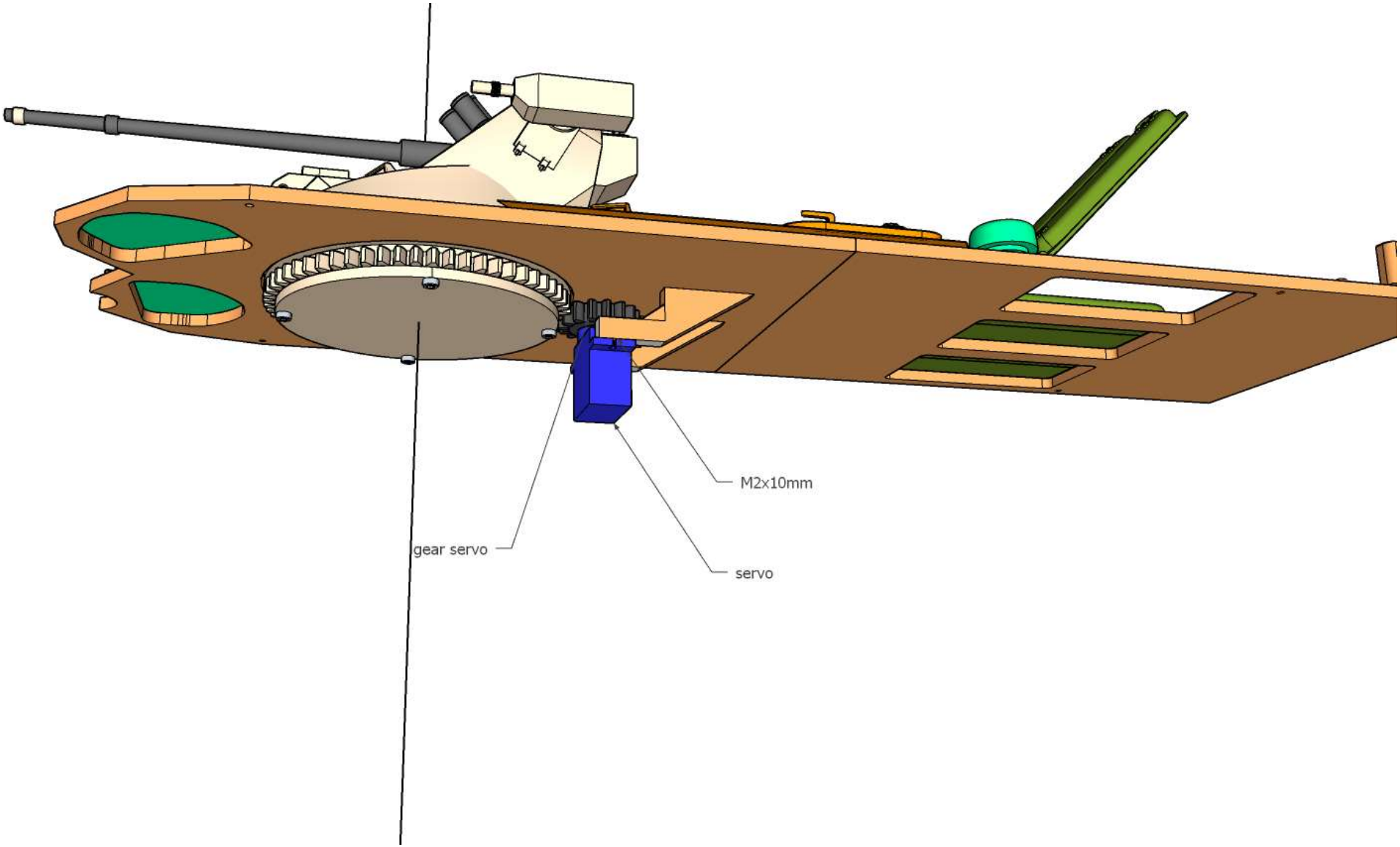

Step 40

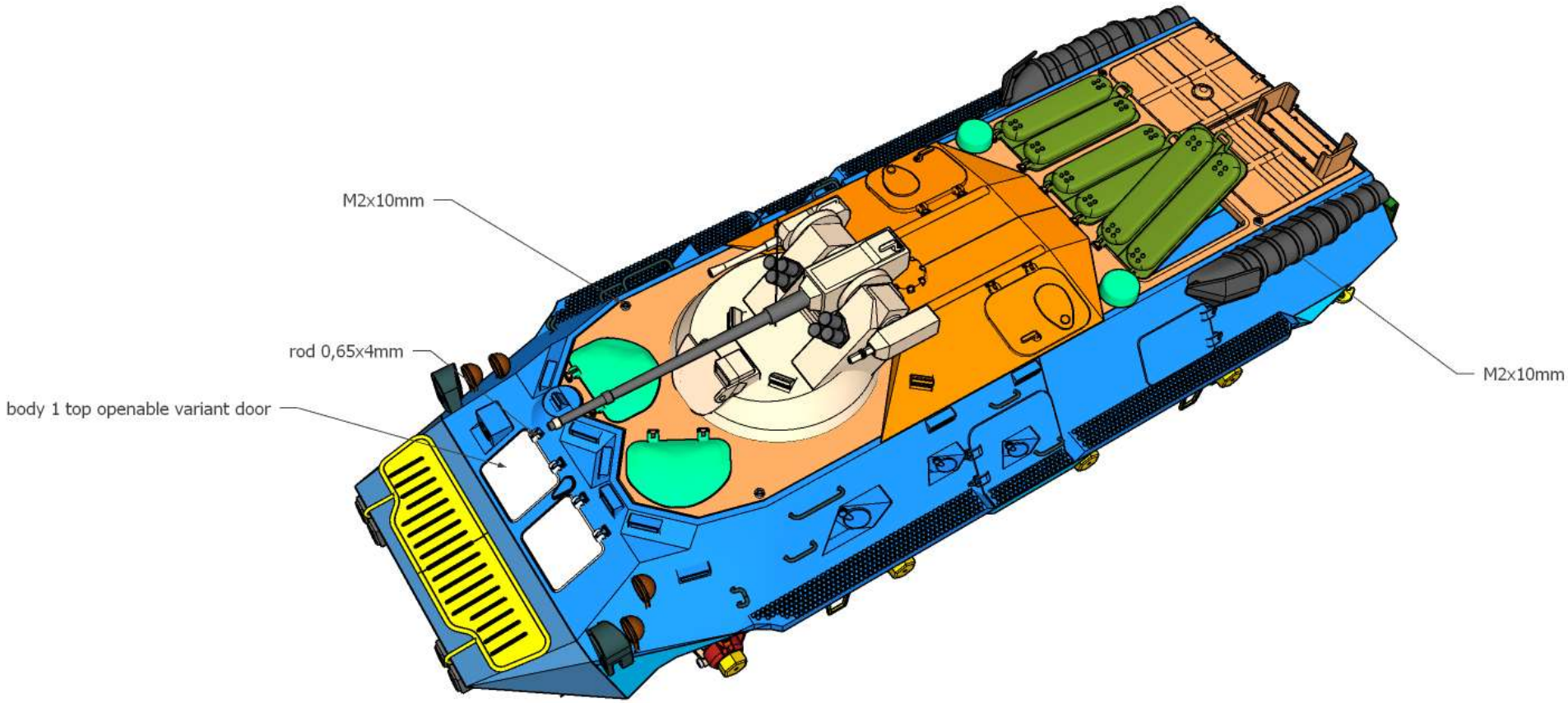
M2x10mm
rod 0,65x4mm
body 1 top openable variant door
M2x10mm

Step 41

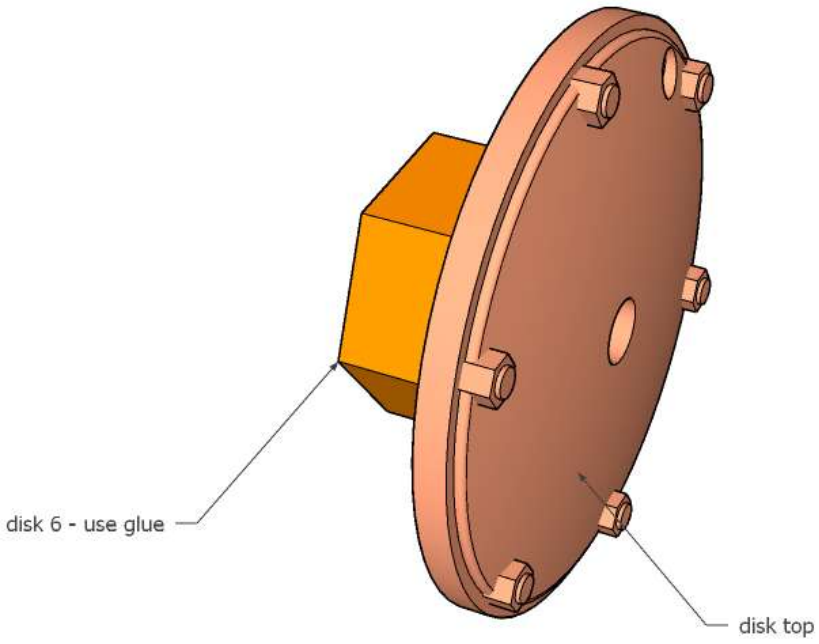

Step 42

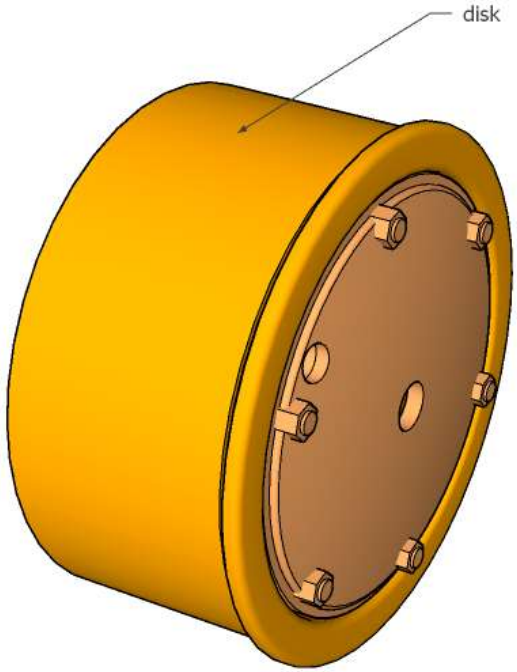

Step 43

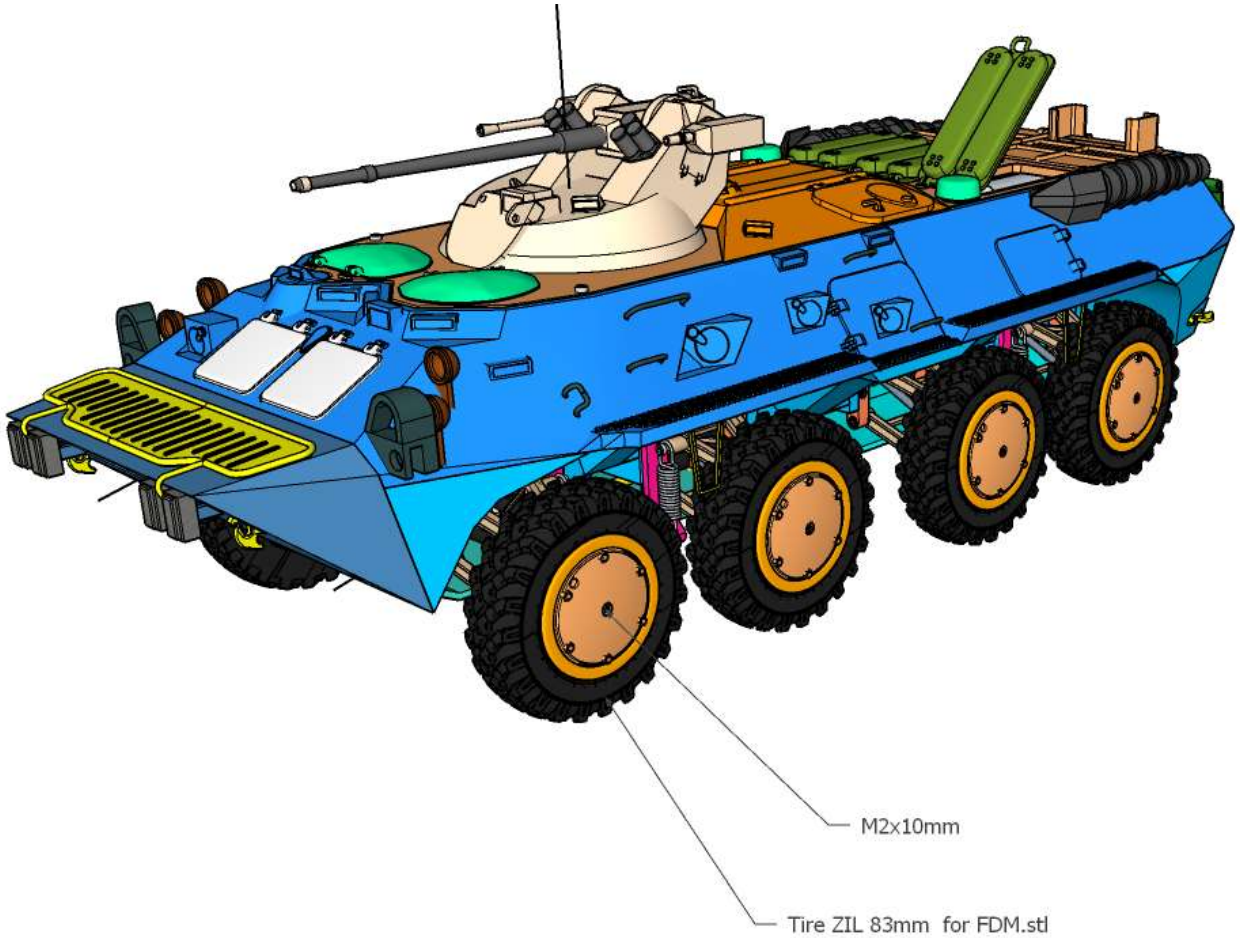

DONE